Pryda Timber Connectors

High Capacity Product Guide

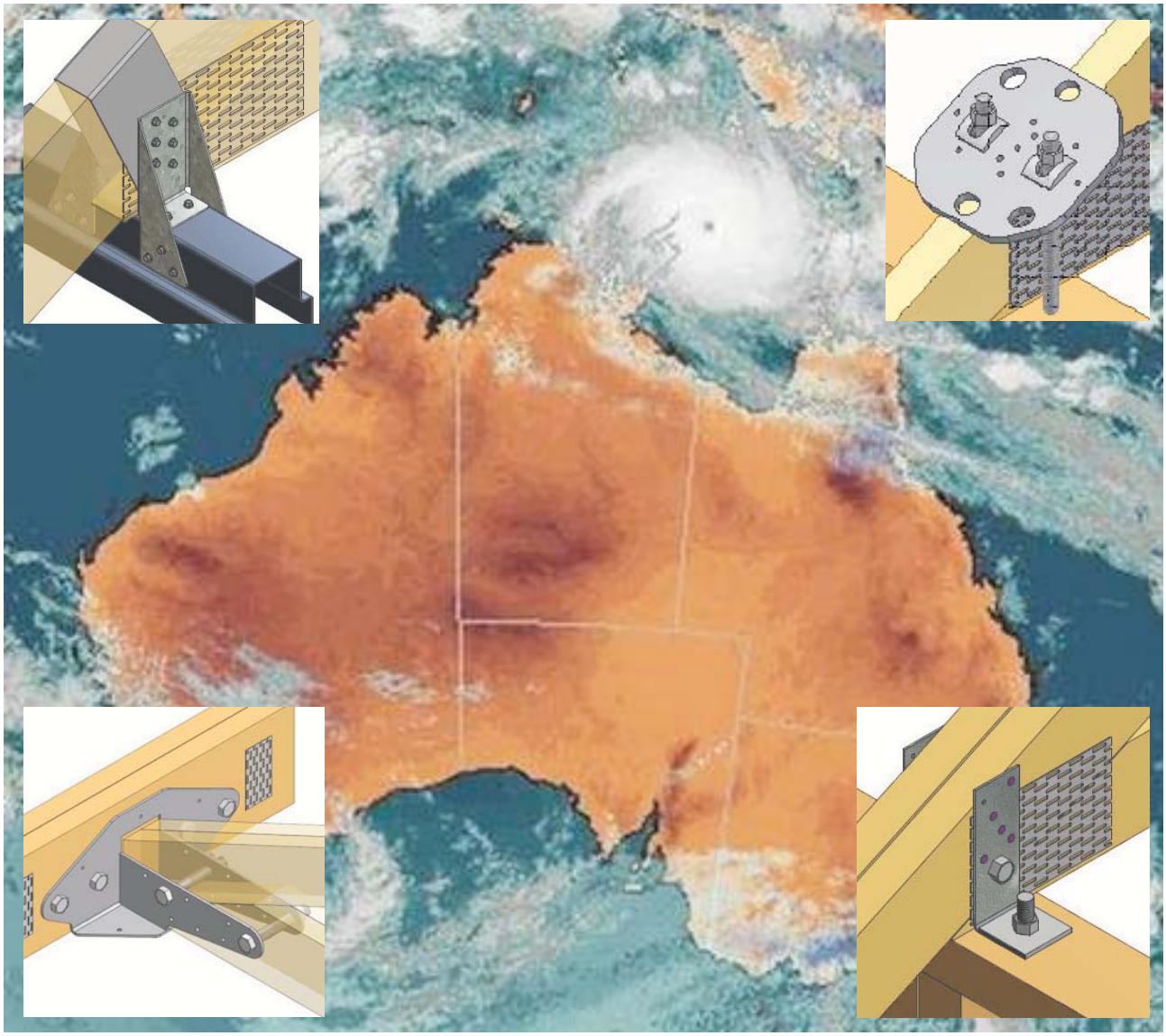

A complete guide to the design, specification and installation of Pryda High Capacity Products

March 2014

Pryda High Capacity Product Guide

INDEX

Product Information Updates
Information contained in this guide is subject to change.
The latest updates are available from **www.pryda.com.au**

SELECTION GUIDE

Tie Down Selector Guide										
Footing Tie Down			Wall Type	Roof Tie Down						
41 kN PSQ - JD4 Page 14	36 kN 2 x AS100 - M12 page 15	18 kN AS100 - M12 page 15	Timber	9 kN CPAH JD4 nials page 10	15 kN QHS/2 - nails page 9	20 kN 2 x CPAH JD4 screw/bolt page 10	30 kN 2 x QHS/2 JD4 nails page 9		54 kN HCTD JD4 M12 bolts Page 6	100 kN 2 x HCTD LVL M16 bolts Page 6
41 kN PSQ - JD4 Page 14	36 kN 2 x AS100 - M12 page 15	18 kN AS100 - M12 page 15	Steel	9 kN CPAH JD4 nials page 11	15 kN PCG JD4 screws page 8	20 kN 2 x CPAH JD4 screw/bolt page 11	30 kN 2 x QHS/2 JD4 screws page 9	38 kN 2 x PCG/O JD4 screws page 8	54 kN HCTD JD4 M12 Page 6	100 kN 2 x HCTD LVL M16 Page 6
			Block Work						54 kN HCTD JD4 M12 Page 6	100 kN 2 x HCTD LVL M16 Page 6
Truss to truss connection					12 kN TBHD75/T JD4 Bolts Page 12				50 kN TBHD75/T JD4 Bolts+screws Page 12	

Legend (Typical)	
12.8 kN	Denotes the maximum capacity of the Pryda bracket
TBHD75	Denotes the product code of the Pryda bracket
JD4	Denotes the timber joint strength to achieve capacity
Bolts	Denotes connectors used with Pryda bracket
Page 9	Denotes where full design information can be accessed

Important notes	
	Maximum "in service" capacity may to determined by load cases other than uplift. Refer to the full design data for each Pryda bracket to determine suitability for each specific application. If in doubt contact your local Pryda Design Office.

GENERAL NOTES

Timber Joint Groups

Joint groups for some common timber are tabulated below. For further information refer Table H2.3 and H2.4 in AS1720.1:2010 – Australian Standards – Timber Structures Part 1: Design Methods.

Timbers	Strength Group		Joint Group	
	Dry	Green	Dry	Green
Oregon (Douglas fir) – America	SD5	S5	JD4	J4
Oregon from elsewhere	SD6	S6	JD5	J5
Radiata pine, heart-excluded	SD6	NA	JD4	NA
Radiata pine, heart-in	SD6	NA	JD5	NA
Slash pine	SD5	S5	JD3	J3
Ash type hardwoods from Vic, NSW highlands & Tas	SD4	S4	JD3	J3
Non-Ash type hardwoods from Qld & NSW	SD3	S3	JD2	J2

Material Thickness

All material thicknesses referred to in this guide are the total coated thickness. This includes the zinc coating thickness, which is typically around 0.04mm for Z275 steel.

Fastener Specifications

Fixing into Timber:
Fasteners used in this guide for fixing into timber are typically:

(i) 35 x 3.15 dia Pryda Timber Connector nails (eg: QHS9/2, CPAH etc)
(ii) No.12x35 Type 17 screws -Pryda product code: WTF12-35. (eg: PCG, CPAH, TBHD75/T)
(iii) M12 or M16 bolts (eg: PSQ and TBHD75/T)

Note on Machine Driven Nail Use
Where appropriate, 32x2.3 mm Duo-Fast C SHEG (ie: screw hardened electro galvanized) machine driven nails (code D40810) may be used instead of the specified 35x3.15 mm Pryda Timber Connector Nails to fix Pryda connectors provided that:

- 20% more nails are used (eg: 5 instead of 4, 4 instead of 3, 3 instead of 2) or alternatively, design capacities are to be reduced by 20% where the same number of nails are used
- machine driven nails are driven at nail spacings and edge distances similar to the hole pattern but these nails are not driven into the holes.

Fixing into Steel:
Fastener used in this guide for fixing into steel (eg: Pryda Cyclonic Grips into steel top plate) is the 12g screws (Buildex 12-14x20 Teks® screws using a nominal screw diameter (df) of 5.4 mm.

Tie-down Anchors:
Tie-down anchors include M12x100 Ramset™ Anchorscrews™ and M12 or M16 tie-down rods with a suitable epoxy set chemical anchor.

Design Loads & Capacities

The tabulated capacities are for Category 1 joints. For all other joints, reduce design capacities by using the following factors:

- Category 2 Joints: **0.94**
- Category 3 Joints: **0.88**

Note: Category 1 joints are defined in Table 2.2 AS1720.1:2010 as structural joints for houses for which failure would be unlikely to affect an area of 25 sqm OR joints for secondary elements in structures other than houses.

Design Standards

The Design Uplift Capacities given in this guide include the appropriate Capacity Factors (ϕ). They have been calculated in accordance with AS1720.1:2010 (lateral capacities of nails, screws or bolts into timber) and AS/NZS 4600:2005 (steel screws in shear) and the steel capacities of the connectors have been established from test.

Durability

Pryda products having Z275 coating is suitable for most internal applications. Refer BCA for information on the extent of its suitability.

HIGH CAPACITY TIE-DOWN PLATES

Specifications

Pryda has two types of High Capacity Tie-Down Kits.

(i) **HCTD** for tying down timber roof trusses to timber frames.

(ii) **HCTD/WA** for tying down timber roof trusses to steel frames.

Contents per kit	HCTD	HCTD/WA
Plate quantity	10	5
Over washers	20	10
Under washers	n/a	5
M12 threaded rod	n/a	10
M12 Nylock® nut	n/a	20
Plate size	150 x 150 x 8mm	
Plate steel	G250-hot dip galvanised	

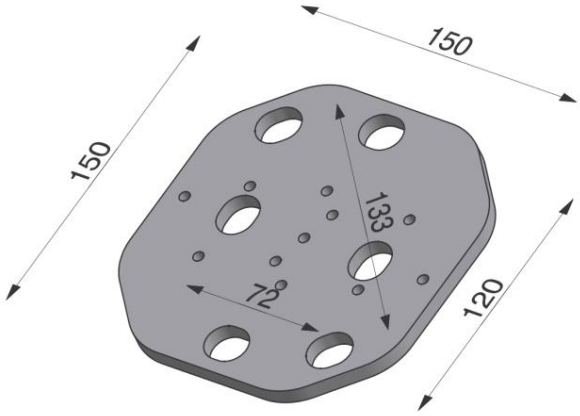

Design Capacities

(I) Using Single Plate

Timber Grade (Truss chord)	Truss Laminates (2)	Design Capacity (4) (kN)	Minimum Tie-Down Rod
LVL10/13	Single	**45.0**	2/M12
MGP 10/12/15	Multiple	**54.0**	2/M12
LVL 14/18	Single	**54.0**	2/M12
F17, F27	Multiple	**54.0**	2/M12

(II) Using Double Plates

Timber Grade (Truss chord)	Truss Laminates (2)	Design Capacity (4) (kN)	Minimum Tie-Down Rod
LVL10/13	Single	**45.0**	2/M12
MGP 10/12/15	Multiple	**90.0**	2/M16
LVL 14/18	Single	**75.0**	2/M16
F17, F27	Multiple	**100.0**	2/M16

Notes:

1. This Table values are valid for both internal and external tie-downs.
2. Single refers to 1/35 or 1/45 truss laminate. “Multiple” refers to any multiple laminate (2/35, 2/45 or 3/35).
   The HCTD plate should be orientated correctly to accommodate single, double or triple laminated trusses. See illustration.
3. 2/M16 rods may be replaced with high-strength 2/M12 (8.8/s) rods.
4. The Design Capacities given here are valid only if the tie-down rods are adequately anchored to the ground. Anchorage details to be provided by others.

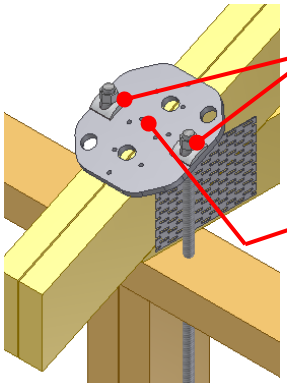

CURVED WASHERS to facilitate different roof pitches to a maximum of 30°

Fix plate to truss using 3 nails per laminate

SINGLE PLATE for a maximum 54 kN capacity

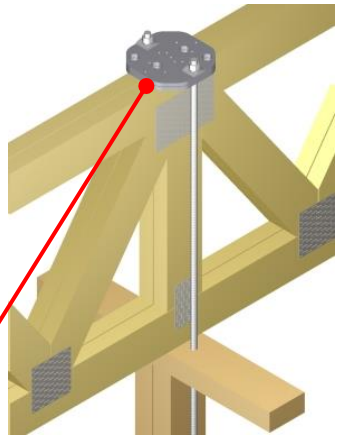

DOUBLE PLATES typically used at internal supports

PLATE ORIENTATION

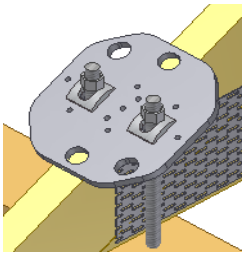

SINGLE LAMINATE TRUSS

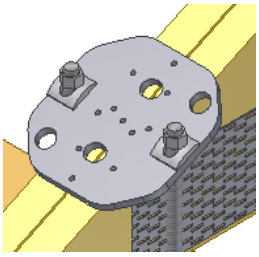

DOUBLE LAMINATE TRUSS

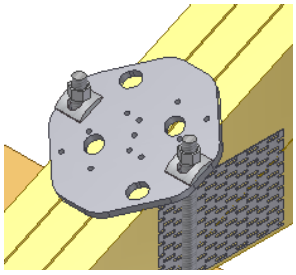

TRIPLE LAMINATE TRUSS

Installation Instructions- Timber Frame:

1. Establish the tie down force to be restrained through Pryda Build or by other means.
2. Establish from the Design Capacity tables the required components and the appropriate configuration.
3. Establish centre line of truss over support.
4. Place the HCTD bracket over the top plate aligning both of its centrelines with the centre lines of the top plate and the truss.
5. Temporarily fix with several Pryda product nails.
6. Match drill 14/18mm diameter holes vertically down through the appropriate HCTD holes and down through the top plate. (This is to allow for the correct alignment of the tie-down rods with the HCTD bracket after installation of the truss).
7. Remove the HCTD bracket.
8. Install the truss.
9. Install tie down rods. Ensure there is sufficient length above the truss to be able to fix the HCTD and HCTD/OW.
10. Install HCTD bracket over the truss and rods.
11. HCTD/OW washer over each rod flat side down.
12. Prior to tightening nuts down onto the assembly, and with the tie-down ties vertically aligned fix four Pryda product (per laminate of truss) nails down through the small holes in the HCTD bracket into the top of the truss top chord.
13. Tighten the nuts.

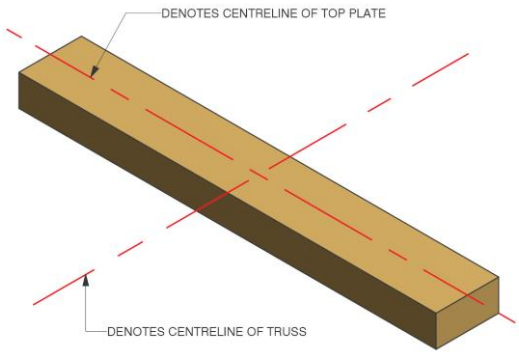

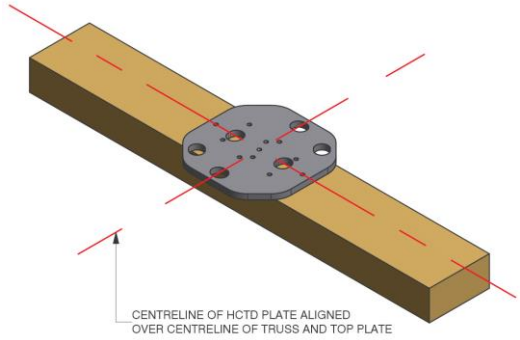

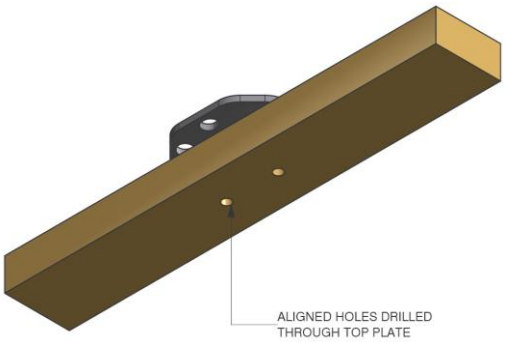

Installation Instructions- Steel Frame:

1. Carry out items 1 through to 8 as noted for a timber frame. Refer above.
2. Use HCTD/WA kit to complete installation.
3. Position the Under Washer up under the stiffened top plate so that the appropriate holes are aligned.
4. Fix nut on one end of threaded rod.
5. Fit the free ends of the threaded rods up through the matching holes in the Under Washer and stiffened top plate.
6. Fit the HCTD bracket and over washers in that order over the threaded rods.
7. With the threaded rods vertically aligned fix four Pryda product (per laminate of truss) nails down through the small holes in the HCTD bracket into the top of the truss top chord.
8. Tighten the nuts.

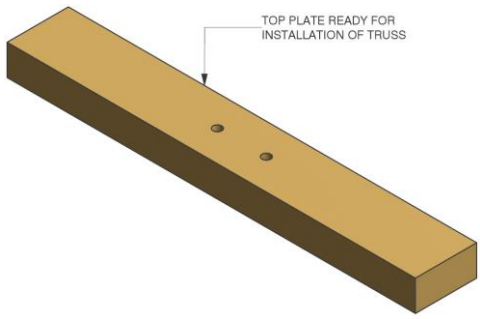

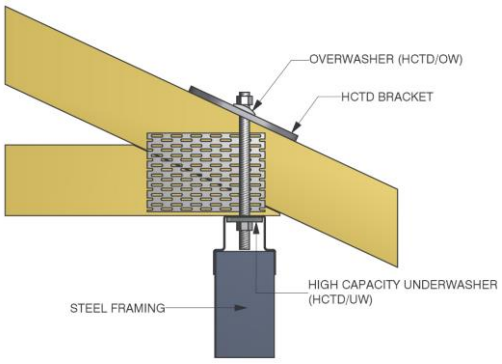

CYCLONIC GRIPS (heavy duty)

Pryda Cyclonic Grips (heavy duty) are typically used in cyclonic areas for tying down roof trusses or other roof members to a steel frame having a heavy duty steel top plate. ("Stiffened top plate")

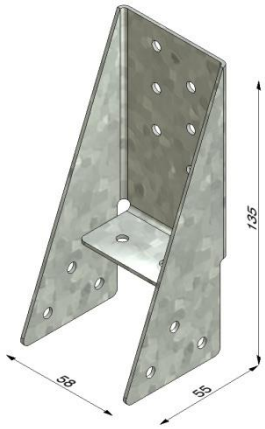

Specification

Size	See Dimensions on the right
Steel	G300-Z275 Galvanised steel
Product Code	PCG
Thickness (mm)	1.6
Packing	50 per carton

Design Capacities for a Pair of Cyclonic Grips with an Overstrap

Note: The wall plate is assumed to be adequate in its own right, to resist design loads given in the table.

Fixing Requirement for Each Cyclonic Grip:
1.6mm G450 top plate: 8 /12g Teks screws
1.6mm G300 overstrap: 4 or 6 /12g Teks screws

Joint Group of truss Chord	Truss Thickness	Uplift Capacity (kN)	
		4 screws into Overstrap	6 screws into Overstrap
JD5, JD4	1/35	22.0 (1)	22.0 (1)
	2/35	25.0	38.0
JD3	1/35	25.0	35.0 (1)
	2/35	25.0	38.0

Notes:

1. Capacities are limited by the crushing strength of the top chord against the overstrap. All other values are limited by screw capacity in steel.

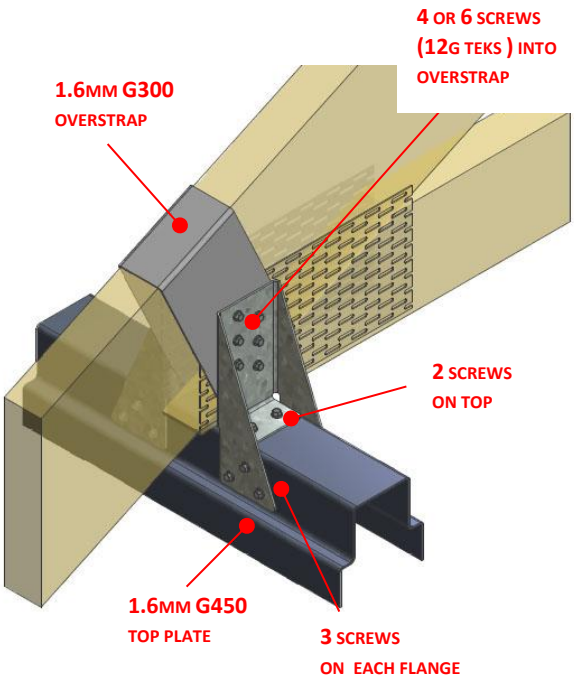

Design Capacities for a Single Cyclonic Grip

Note: The capacities given in the table below may be multiplied by 2 when a pair of Cyclonic Grips are used. The wall plate is assumed to be adequate in its own right, to resist design loads

Fixing Requirement for Each Cyclonic Grip:
1.6mm G450 top plate: 8 /12g Teks screws
Truss Chord: 4 or 6 /No.12x35 Type 17 screws

Joint Group of Truss Chord	Uplift Capacity (kN)	
	4 screws into Truss Chord	6 screws into Truss Chord
JD5	7.0	10.5
JD4	10.0	15.0
JD3	14.0	20.0

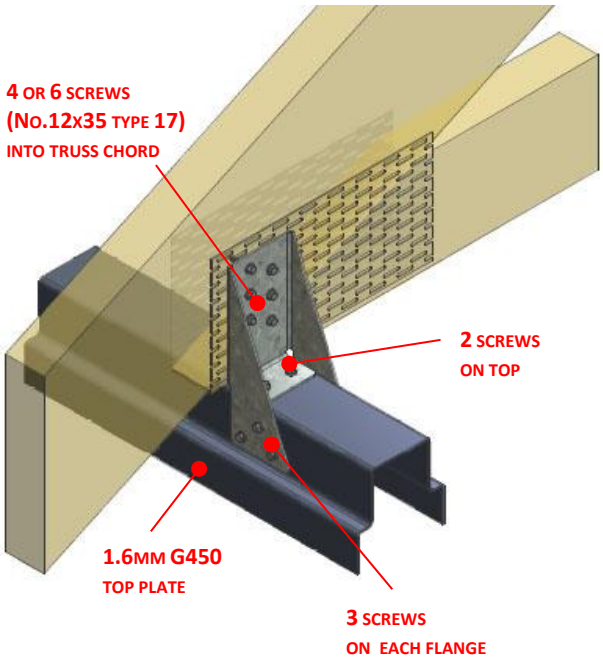

CYCLONIC GRIPS

Pryda Cyclonic Grips (PCG90) are added to the range for use in 90mm wide framing (steel or timber), for tying down roof trusses or other roof members.

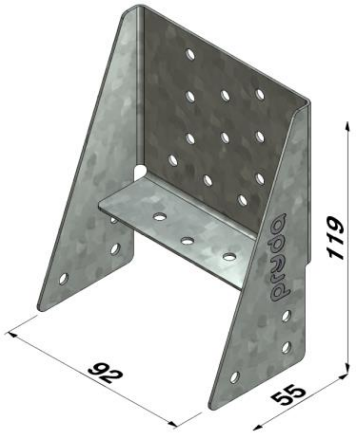

Specification

Size	119x55x92 (PCG90)
Steel	G300-Z275 Galvanised steel
Product Code	**PCG90**
Thickness (mm)	1.2
Packing	50 per carton

Design Capacities for a PAIR of Cyclonic Grips

Note: The wall plate is assumed to be adequate in its own right, to resist design loads given in the table.

Fixing Requirement for Each Cyclonic Grip:
G550 top plate: 8 /M6 x 22 GX screws
Truss chord: 6 /No.12x 35 Type 17 screws

Top Plate thickness	Uplift Capacity (kN) for a PAIR		
	JD5	JD4	JD3
0.75mm	19.8	19.8	19.8
0.95mm	21.6	30.6	31.4
1.15mm	21.6	30.6	35.0

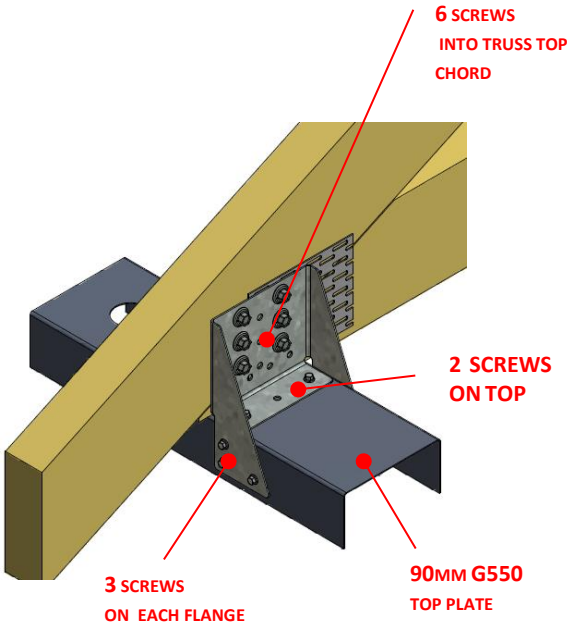

Design Capacities for a Single Cyclonic Grip

Note: The wall plate is assumed to be adequate in its own right, to resist design loads given below.

Fixing Requirement for Cyclonic Grip:
G550 top plate: 8 /M6 x 22 GX screws
Truss chord: 6 /No.12x 35 Type 17 screws

Top Plate thickness	Uplift Capacity (kN) for a SINGLE		
	JD5	JD4	JD3
0.75mm	9.9	9.9	9.9
0.95mm	10.8	14.0	14.0
1.15mm	10.8	14.0	14.0

Note: 10g x 16mm Teks screws may be used in lieu of the specified GX screws, provided the design capacities are reduced by 10%.

For Information on fixing into timber, refer Pryda Tie-Down Connectors Guide.

CYCLONE STRAPS – Heavy Duty

Pryda Heavy Duty Cyclone Straps are used primarily in cyclonic areas for tying down purlins to trusses or roof trusses or other roof members to the wall frame.

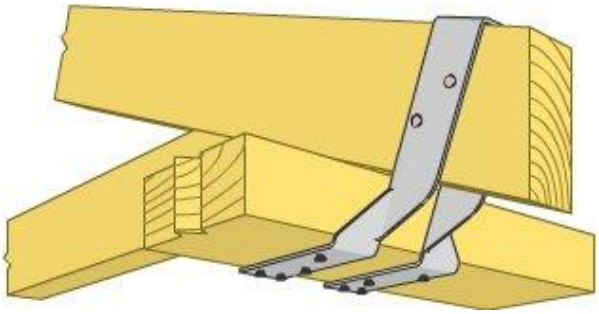

Features

- Quick and easy to install
- Sufficient capacity for many cyclonic area uses
- Can be "doubled up" for twice tie-down capacity
- Range of lengths to suit different nailing and capacity requirements
- Maximum design capacity determined from Pryda tests

Specification

Size	See Dimensions on right
Steel	G300-Z275 Galvanised steel
Product Code	**QHS9/2**
Thickness (mm)	1.2
Packing No.	25
Per	Bundle
Length	880mm

Applications

Typical applications of Pryda Heavy Duty Cyclone Straps are shown in the diagram below

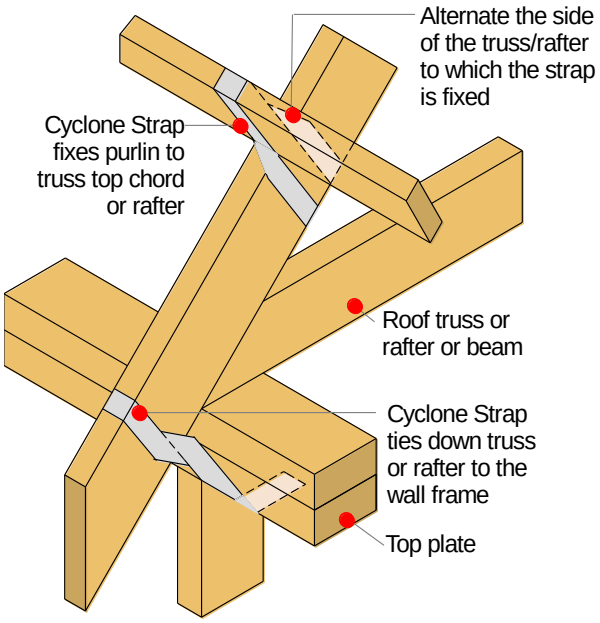

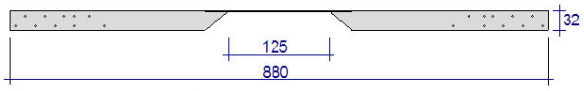

QHS9/2

Design Capacities

Limit State Design capacities for a single **Pryda Cyclone Strap** resisting wind uplift are as tabulated below.

	JD5	JD4	JD3	JD2
6 Nails/leg	8.8	10.5	14.8	15.0
Wrapped round	15.0	15.0	15.0	15.0

Capacities for straps that are Wrapped Round (see Note 3)

Notes:

1. Wind Uplift capacities are based on the Timber Structures Standard, AS1720.1:2010 adopting k1=1.14, for use in conjunction with AS/NZS1170:2002 loading code.

2. These design capacities apply to **Pryda Cyclone Straps** fixed at both ends with 35x3.15 mm galvanised **Pryda Timber Connector Nails** or equivalent.
3. When the strap is wrapped round the wall plate or other timber member and fixed with 4 nails per leg driven into the underside of the top plate, the capacity is limited by the steel. Tests have proven that bending the legs of **Cyclone Straps** around the timber increases the ultimate load the Strap is capable of carrying.
4. See General Notes.

PRYDA HOLD-DOWN BRACKET

Pryda Hold-down Bracket can be used in a variety of applications in timber structures. Providing tie-down resistance for roof trusses or wall studs is the most common usage of this product.

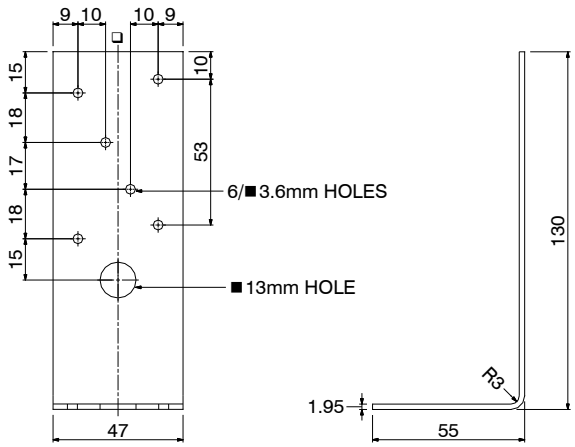

Specification

Size	130 x 50 x 47
Steel	G300-Z275
Product Code	MPCPAH
Thickness (mm)	2.0
Packing	75 per carton

Design Capacities

FIXING INTO TIMBER FRAMING

The design capacities for **a pair of CPAH** brackets are tabulated below for use with both 35 x 3.15 Pryda Timber Connector nails and No.12 x 35 Type 17 screws. In order to achieve these capacities, a suitable tie-down connector is required.
Note: These capacities are also suitable when CPAH is used as a tie-down bracket for wall studs

Uplift Capacities for 5/35 x 3.15 nails per bracket

Joint Group Of Truss Chord	Uplift Capacity (kN) (using a total of 10 nails into truss)
JD5	**7.9**
JD4	**9.4**
JD3	**13.2**

Uplift Capacities for 4/No. 12 x 35 Type 17 screws per bracket

Joint Group Of Truss Chord	Uplift Capacity (kN) (using a total of 8 screws into truss)
JD5	**14.0**
JD4	**20.0**
JD3	**28.0**

Tie-Down Anchors

Top Plate Tie-Down – Use a M12 tie-down rod with 40x40x5.0 washer anchored in to concrete using a suitable epoxy set chemical anchor. Alternatively, 4/No.14 x 50 Type 17 screws per bracket may be used in some cases (preferably with pre-drilled holes), to achieve a capacity of 10.0 kN in JD4 material (a total of 20.0 kN for a pair of brackets). In this case, additional connectors are required to transfer tie-down forces from wall plate to foundation.

When CPAH is used to tie-down wall studs, adopt M12 x 150 Ramset™ Anchorscrew™ to anchor the bottom plates into concrete slab/footing to satisfy all of the above capacities. For a minimum edge distance of 45mm and embedment depth of 110mm in Grade 20 concrete, a tie-down capacity of approx 14.0 kN per anchor can be achieved. For the same conditions, used in internal walls, a capacity of 25.0 kN is achievable.

Design Capacities

The design capacities for CPAH brackets are tabulated below for use with both 10g and 12g screws. In order to achieve these capacities, a suitable tie-down anchor and a minimum 40x40x5.0mm galvanised washer is required.

Uplift Capacities for 10g screws

Steel Grade & thickness of wall stud	Design Uplift Capacity (kN) for 10g screws on wall stud			
	2 screws	3 screws	4 screws	6 screws
G300; 0.8mm	2.0	3.1	4.1	6.1
G300; 1.0mm	2.9	4.4	5.8	8.8
G550; 0.8mm	3.0	4.5	6.0	8.9
G550; 1.0mm	4.7	7.1	9.4	14.2

Uplift Capacities for 12g screws

Steel Grade & thickness of wall stud	Design Uplift Capacity (kN) for 12g screws on wall stud			
	2 screws	3 screws	4 screws	6 screws
G300; 0.8mm	2.2	3.2	4.3	6.5
G300; 1.0mm	3.1	4.6	6.2	9.2
G550; 0.8mm	3.1	4.7	6.3	9.4
G550; 1.0mm	5.0	7.5	10.0	14.9

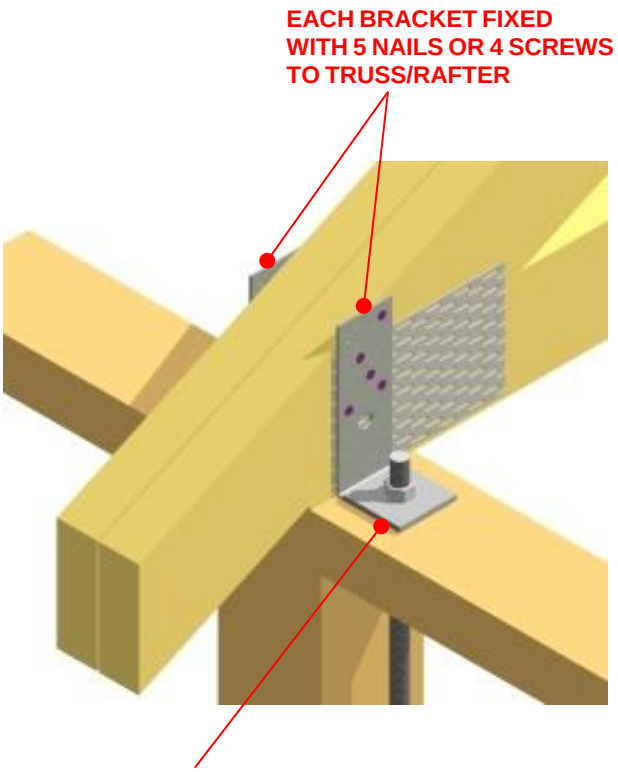

CPAH IN APPLICATION

Tie-Down Anchors

Ramset™ Anchorscrew™ may be used as a tie-down anchor into concrete slab/footing to satisfy all of the above capacities. Using M12x100 Anchorscrew, having a minimum edge distance of 45mm and embedment depth of 90mm in Grade 20 concrete, a tie-down capacity of approx 10.0 kN can be achieved.

Under the same condition, using M12x150 Anchorscrews with 140mm embedment, a 20 kN capacity could be achieved.

This anchorscrew (zinc plated) is available from Pryda (Product Code: AS12100H), packed in a carton of 50. A galvanized Anchorscrew™ is also available from Ramset™ for use in more corrosive environments. For more information visit **www.ramset.com.au.**

PRYDA HOLD-DOWN BRACKET

FIXING INTO STEEL FRAMING

HEAVY DUTY TRUSS BOOT – TWIN FIN

Steel Brackets for Heavy Roof Truss Connections

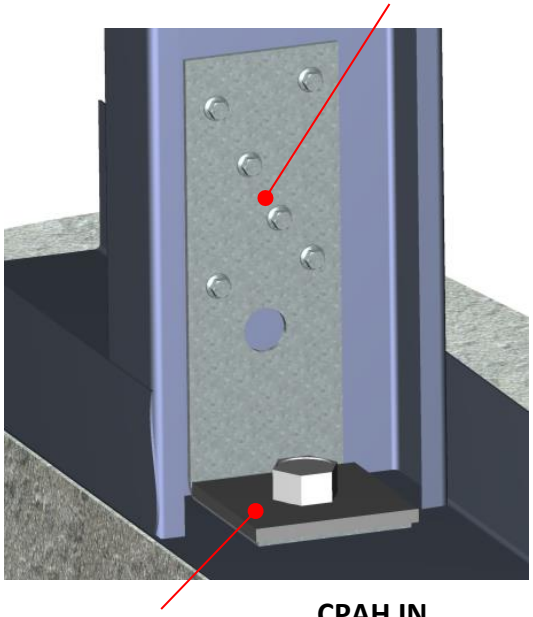

CPAH IN APPLICATION

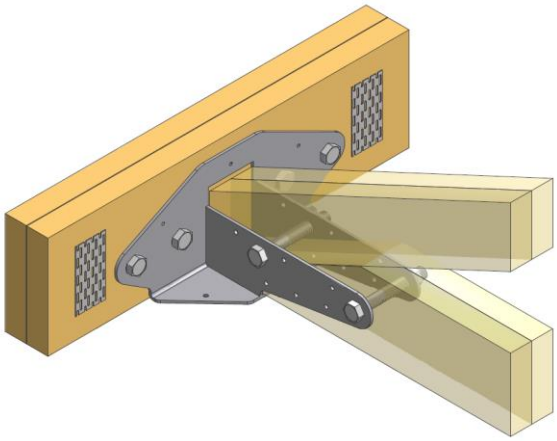

TBHD75/T Truss Boot – Twin Fin

Features

The long anti-rotation leg and heavy duty steel of the **Pryda Twin Fin Heavy Duty Truss Boot**, combined with the inherent high stiffness of the carried truss, prevents twisting of the bottom chord of the girder. Consequently, anti-rotation bars are not necessary. Useful variations of this product have:

The newly introduced **TBHD75/T** Truss Boot has further benefits which include:

* Special shape to reduce weight, and rounded edges for easier handling
* Improved bearing capacity for supported truss.
* A unique slot in the back of the boot to eliminate the need to cut 6-10mm from the heel of the supported truss.
* Additional screw fixings into supported trusses to improve uplift capacity, if required.
* Nail holes in the back flange to allow the boot to be easily located on the girder truss prior to drilling for bolts.
* Holes in the base to allow screw to hold any incoming angled member at ceiling level (such as a hip truss) in position. These holes are countersunk to allow flush finish if required.

Bolt Kits for Truss Boots

Hot dipped galvanised Kits of bolts, nuts and washers are available to suit all bolt fixed boots. Details are:

Product Code	OBK816
To Suit	TBHD75/T
Packed	60
Bolts (mm)	6 /M16
Washers (square)	4 @ 63 x 5

Installation

Pryda Heavy Duty Truss Boots are installed with 6@ M16 or 5/8 inch bolts and with **63x4 mm square washers** on all surfaces where the bolt head or nut bears directly on the timber. Anti-split **Claw nailplates** are to be installed on both faces of the girder and on both sides of the truss boot (see Application at left).

Screws used on the TBHD75/T Truss Boot are to be **No. 12x35 mm Type 17 hex head screws** (code WTF12-35).

Specification

Pryda Heavy Duty Truss Boots are made to the following specification:

Sizes:	See Dimensions following.
Steel:	Mild steel, hot dipped galvanized- thickness: - 4 mm for TBHD75/T
Product Codes:	TBHD75/T
Packing	1

Dimensions

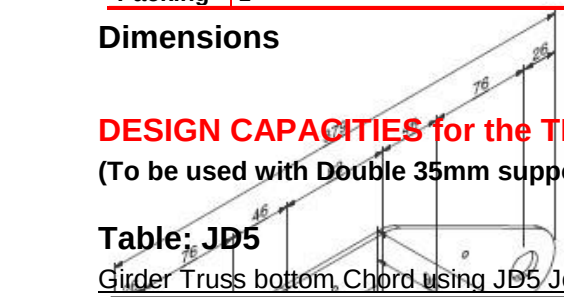

Fixing into Supported Truss: 2/M16 bolts + 6 screws on each arm (12 screws in total).

DESIGN CAPACITIES for the TBHD75/T Heavy Duty Truss Boot – Twin Fin

(To be used with Double 35mm supported trusses only)

TBHD75/T for Double 35mm Supported Trusses

Table: JD5

Girder Truss bottom Chord using JD5 Joint Group (eg: MGP10 etc) with a minimum 130mm depth

Girder Truss Thickness (mm)	Supported Truss Thickness	Design Capacities (kN) for varying Load Cases and Supported Truss Joint Groups											
		Supported Truss = JD5				Supported Truss = JD4				Supported Truss = JD3			
		1.35G (Dead Only)	1.2G+1.5Q (Dead+Live)	Wind Uplift		1.35G (Dead Only)	1.2G+1.5Q (De	Wind Uplift		1.35G	1.2G+1.5Q (Dead+Live)	Wind Uplift	
				Bolts Only	*Bolts+Screws*							*Bolts Only*	*Bolts+Screws*
35	2/35	9.8	13.2	15.6	19.5 (3)	9.8	1				13.2	19.5 (3)	19.5 (3)
45	2/35	12.6	17.0	15.6	25.2 (3)	12.6	17.0	21.7	25.2 (3)	12.6	17.0	25.2 (3)	25.2 (3)
2/35	2/35	17.6	23.8	15.6	32.6	17.6	23.8	21.7	35.2 (3)	17.6	23.8	29.5	35.2 (3)
3/35	2/35	21.2	28.7	15.6	32.6	21.2	28.7	21.7	42.4 (3)	21.2	28.7	29.5	42.4 (3)

Table: JD4

Girder Truss bottom Chord using JD4 Joint Group (eg: MGP12, MGP15, Hychord, E-beam etc) with a minimum

Girder Truss Thickness (mm)	Supported Truss Thickness	Design Capacities (kN) for varying Load Cases and Supported Truss Joint Groups											
		Supported Truss = JD5				Supported Truss = JD4				Supported Truss = JD3			
		1.35G (Dead Only)	1.2G+1.5Q (Dead+Live)	Wind Uplift		1.35G (Dead Only)	1.2G+1.5Q (Dead+Live)	Wind Uplift		1.35G (Dead Only)	1.2G+1.5Q (Dead+Live)	Wind Uplift	
				Bolts Only	*Bolts+Screws*			*Bolts Only*	*Bolts+Screws*			*Bolts Only*	*Bolts+Screws*
35	2/35	13.6	18.3	15.6	27.2 (3)	13.6	18.3	21.7	27.2 (3)	13.6	18.3	27.2 (3)	27.2 (3)
45	2/35	17.4	23.6	15.6	32.6	17.4	23.6	21.7	34.9 (3)	17.4	23.6	29.5	34.9 (3)
2/35	2/35	24.4	33.0	15.6	32.6	24.4	33.0	21.7	45.7	24.4	33.0	29.5	48.8 (3)
3/35	2/35	26.4	35.6	15.6	32.6	26.4	35.6	21.7	45.7	26.4	35.6	29.5	50.0 (2)

Table: JD3

Girder Truss bottom Chord using JD3 Joint Group (eg: F17, E-beam+ etc) with a minimum 130mm depth.

Girder Truss Thickness (mm)	Supported Truss Thickness	Design Capacities (kN) for varying Load Cases and Supported Truss Joint Groups											
		Supported Truss = JD5				Supported Truss = JD4				Supported Truss = JD3			
		1.35G (Dead Only)	1.2G+1.5Q (Dead+Live)	Wind Uplift		1.35G (Dead Only)	1.2G+1.5Q (Dead+Live)	Wind Uplift		1.35G (Dead Only)	1.2G+1.5Q (Dead+Live)	Wind Uplift	
				Bolts Only	*Bolts+Screws*			*Bolts Only*	*Bolts+Screws*			*Bolts Only*	*Bolts+Screws*
35	2/35	18.5	24.9	15.6	32.6	18.5	24.9	21.7	36.9 (3)	18.5	24.9	29.5	36.9 (3)
45	2/35	23.7	32.0	15.6	32.6	23.7	32.0	21.7	45.7	23.7	32.0	29.5	47.4 (3)
2/35	2/35	28.8	42.7	15.6	32.6	28.8	42.7	21.7	45.7	28.8	42.7	29.5	50.0 (2)
3/35	2/35	28.8	42.7	15.6	32.6	28.8	42.7	21.7	45.7	28.8	42.7	29.5	50.0 (2)

Notes:

1. 2/35 refers to 35mm thick double laminated truss and 3/35 refers to 35mm thick triple laminated truss.
2. The values (50 kN) with a superscript (2) refers to the capacities that are limited by steel strength in uplift.
The limiting steel value for "down-loading" is 50 kN.
3. Uplift Capacities – The values with a superscript (3) are limited by 4/M16 bolt fixings in girder truss. U.N.O in Notes 2 & 3, fixing into supported truss governs for UPLIFT.
4. The values in the table apply directly for Category 1 joints. Refer general Notes in page 5 for advice on how the values should be reduced for Category 2 and Category 3 joints.
5. The values related to **1.35G (Dead only)** load case should be checked against reactions arising from 1.35G load case. Similarly **1.2G+1.5Q (Dead + Roof Live)** capacities should be checked against factored reactions from 1.2G+1.5Q load case.
6. A 120mm deep bottom chord for girder trusses may be used when supporting concrete tile roofs in low wind areas (up to N2 wind class) where wind uplift is not critical.
7. It is important to use the specified washer (63 x 5 square) against the timber face to achieve full capacity of M16 bolts. Required only against Girder truss when using TBHD75/T.
8. This data sheet should be read in conjunction with relevant information given in the *Hangers and Truss Boots Guide.*

HIGH WIND POST ANCHORS

Pryda Post Anchors conform to AS3660.1 – 2000 Protection of Building from Termites. All joints are welded.

Advantages

Pryda Post Anchors are manufactured to a consistent quality. Advantages are:

- Compliance with building code requirements
- Hot dip galvanised coating after manufacture, to provide long term protection, suitable for severe external environments (as defined in the Building Code of Australia) which include sites within 1 km from the coast.
- Improved stability of the base with bolt holes close to the stem
- A large range of sizes to suit: (a) stirrup lengths from 300mm to 600mm (b) stirrup widths 90, 100, 125 & 150mm.

Installation

1. Use 12 mm (or 1/2") diameter **galvanised bolts**
2. Anchors and bolts embedded in wet concrete must extend at least 56 mm into the concrete to develop the uplift loads tabulated in this guide.
3. The distance from the top of the concrete to the underside of the post anchor saddle must not exceed 200 mm.

Bushfire Attack Resistance

Most Pryda Post Anchors meet the requirements of the Building Code of Australia (NCC 2013), Volume 2, which requires a minimum of 75 mm clearance between the underside of the Post Anchor saddle and the ground surface or paving level.

Design Capacities – Wind Uplift

Limit State Design capacities (ΦN_j) for **Pryda Standard Post Anchors** resisting wind uplift loads are as follows:

Specification

The general specification for **Pryda Post Anchors** is:

Steel:	Hot dip galvanised
Sizes:	To suit most widths of timber posts. A variety of stirrup lengths – see in the table below
Application	Wet or dry concrete fixing.

High Wind Post Anchors – Hot Dipped Galvanised 5mm Steel

Standard Product Code	Article & Size	Packed
PSQ30090/12	300x50mm-90mm post	6
PSQ300100/12	300x50mm-100mm post	6
PSQ45090/12	450x50mm-90mm post	6
PSQ450100/12	450x50mm-100mm post	6
PSQ60090/12	600x50mm-90mm post	6
PSQ600100/12	600x50mm-100mm post	6

PSQ600125/12	600x50mm-125mm post	6
PSQ600150/12	600x50mm-150mm post	6

Engineered for high wind areas, including tropical regions.

The U shape base is designed for maximum hold-down in concrete.

See AS 1684 Part 3- Table 9.20 (j) reinforcing rod install over anchor end.

75mm clearance

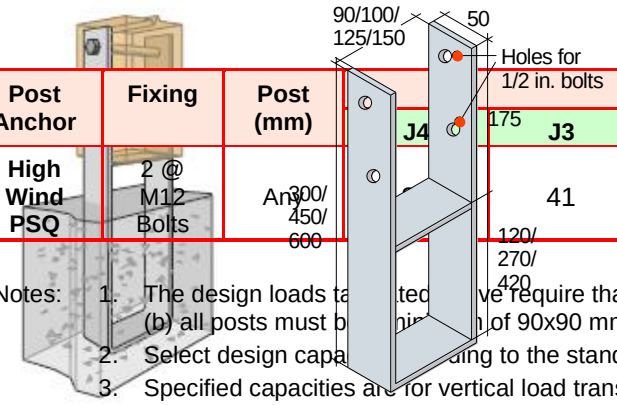

Post Anchor	Fixing	Post (mm)	Uplift Capacities for varying joint groups						
			J4	J3	J2	JD5	JD4	JD3	JD2
High Wind PSQ	2 @ M12 Bolts	Any		41	45	36	41	50	50

Notes:
1. The design loads ta[illegible]tec[illegible]ve require that: (a) the timber post must bear on the Post Anchor base and (b) all posts must b[illegible]ni[illegible]n of 90x90 mm section.
2. Select design capa[illegible]ing to the standard used for determining the design loads.
3. Specified capacities are for vertical load transfer only.
4. The base concrete and fixings to the concrete must provide sufficient resistance to the uplift forces and dead +live loads when embedding in to concrete.
5. Wind Uplift capacities are now based on the AS/NZS 1170:2002 code only, using k1=1.14.
6. Post Anchors should NOT be assumed to contribute towards lateral bracing/ raking stability of a structure in decks or stumps in sub-structure, unless pre-approved by an Engineer.
7. Post Anchors are not Intended to be used for cantilever posts and balustrades without pre-approval from an Engineer.

ANKASCREW™

Also available in zinc and Galvanised

OVERVIEW

Ramset™ released the Ankascrew™ onto the Australian market in February 2000.

Ankascrew™ was originally marketed to the Do It Yourself, home handyperson segment, but because of its simplistic design and ease of use, it has become a popular masonry anchor to all trades.

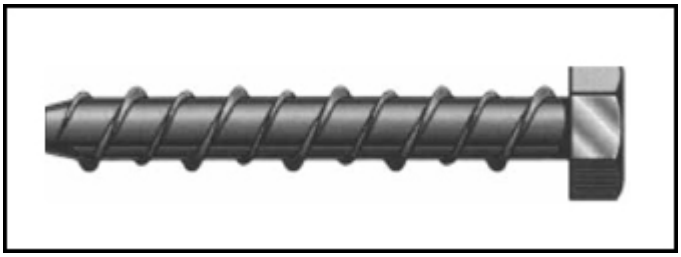

The Ankascrew™ is an innovative, self tapping screw-in anchor, used to fasten fixtures in the light to medium duty range and will fasten materials to concrete and other solid masonry as well as hollow concrete block, solid pressed brick and extended wire cut bricks with holes therein.

The Ramset™ Ankascrew™ is a self tapping anchor with multi-use capabilities where the thread cuts into the substrate for a positive and secure anchorage.

INSTALLATION

To achieve maximum loads the installation process needs to be carried out as follows:

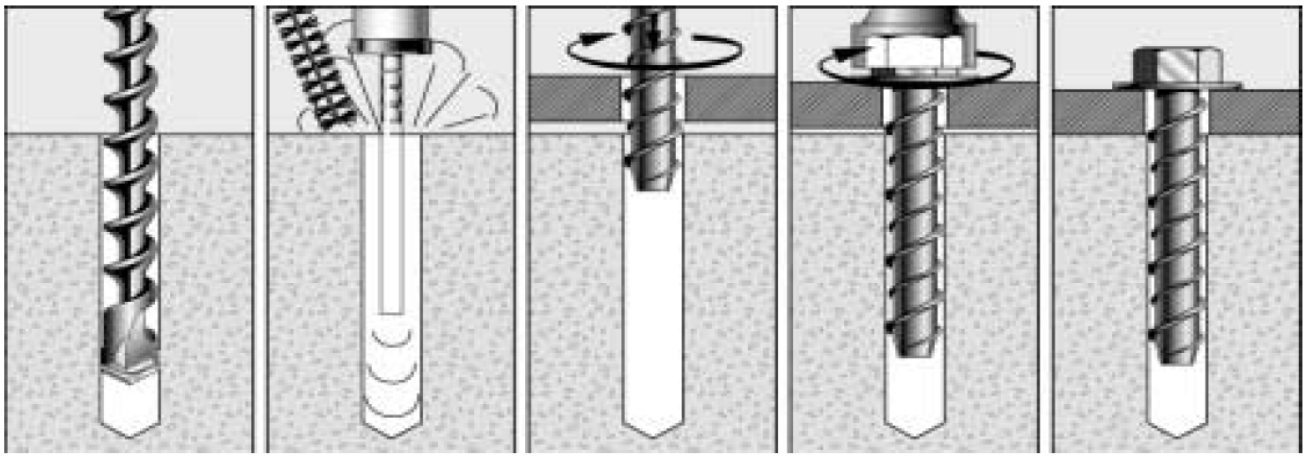

To achieve maximum loads the installation process needs to be carried out as follows.

1. Drill a hole to the correct diameter and depth.
Note:
Hole depth = Bolt length - fixture thickness + overdrill depth.

2. Clean hole with a brush and remove debris with vacuum or hand pump.

3. Using a socket wrench, screw the ANKASCREW into the hole exerting a slight downward pressure until the "self-tapping" action starts.

4. Tighten the ANKASCREW. If resistance is experienced whilst tightening, unscrew fastener one turn and re-tighten, ensuring not to overtighten with excessive torque.

5. For optimum performance, a torque wrench should be utilized.

USES of Ankascrew™

- Pallet racking
- Temporary safety barriers
- Conveyors pipe brackets
- Gate hinges into brickwork
- Temporary hand rails
- Bottom plates
- Used for fast and simple anchoring into solid concrete and masonry or hollow brick and block

Pryda Australia | A Division of ITW Australia Pty Ltd

153-187 Discovery Road, Dandenong South, Vic 3175
Offices in Melbourne, Sydney, Brisbane.
Representatives in all States.

Website: www.pryda.com.au
Email: info@prydaanz.com
Tel: 1800 810 741