Installation Guide for Floor Truss Systems

July 2026

www.pryda.com.au

Contents

FLOOR TRUSS SYSTEMS 3
CORRECT SITE DOCUMENTATIONS 3
TRUSS IDENTIFICATION AND ORIENTATION 3
SUPPORTING STRUCTURE 4
CONSTRUCTION LOADS 4
ON SITE VARIATIONS 4
SAFE HANDLING AND STORAGE 5
HANDLING 5
STORAGE 5
SUPPORT STRUCTURE 6
TEMPORARY FLOOR TRUSS BRACING SYSTEM 6
STABILITY 7
LATERAL BRACING OF FLOOR TRUSS CHORDS 7
BRACING WALLS SUPPORTED BY CANTILEVER 7
FIXINGS AT SUPPORTS 8
TOP CHORD SUPPORTED FLOOR TRUSSES 8
FACE FIXING OF FLOOR TRUSSES 9
BOTTOM CHORD OR END BLOCK SUPPORT BEARING 9
CONSTRUCTION LOADS 10
STACKING OF CONSTRUCTON MATERIALS TO AVOID 10
STACKING OF FLOORING SHEETS 11
TRUSS ORIENTATION AND INTERNAL SUPPORT CONDITIONS 12
SUNKEN SECTIONS 12
INTERNAL WALLS 13
NON-LOAD BEARING WALLS 13
Fixing of Floor Trusses to Bracing Walls 13
Fixing to Non-Bracing Walls 14
EXTERNAL WALLS 15
SUPPORT OF CONCENTRATED LOAD 15
FLOOR OPENINGS 16
BEAM POCKET SUPPORT – HEADER BEAMS 16
DUCTS FOR MECHANICAL SERVICES 16
MULTIPLE TRUSS FIXING 17
CANTILEVERS 17
Internal Cantilevers 17
External Cantilevers (Balconies) 17
Balcony Cantilevers – solid joists 18
CANTILEVER SUPPORT OF OFFSET WALL 18
STRONGBACKS 20
Strongback size and fixings 20
NON-ALIGNED STRONGBACKS 21
APPENDIX 1: 22
TYPICAL FLOOR TRUSS LAYOUT DOCUMENTATION 22

FLOOR TRUSS SYSTEMS

Pryda Floor Truss Systems are a complete structural system for timber floors made up of flooring material, floor trusses, Strongbacks, connections and bracing. There are two different types of web systems for these trusses. Both have timber chords, but Pryda Longreach uses all-timber webs, while SpaceJoist™ uses metal webs for the diagonals and timber webs for the verticals.

Pryda Span System have expanded and will be part of the improved Pryda SpaceJoist™ Floor Truss System.

To ensure the Floor Trusses are installed correctly the following items need to be carefully adhered to:

CORRECT SITE DOCUMENTATIONS

The following documents are required:

- Pryda Floor Truss Specification Guide *
- Pryda Floor Truss layout (See appendix 1)
- Pryda Producer Statement Report
- Pryda Floor Truss design details
- Pryda Design Guides*

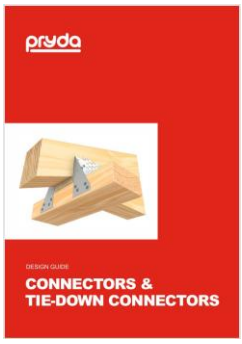

The documents highlighted with an '*' are available for download at www.pryda.com.au. The other documents are available from the Pryda floor truss manufacturer.

Note: *Under no circumstances should the floor truss spacing exceed the design spacing (usually 450mm or 600mm). The manufacturer should supply a floor truss layout that clearly defines the correct location of any special truss.*

TRUSS IDENTIFICATION AND ORIENTATION

Floor trusses are individually marked with a unique identification that is referenced on the floor truss layout. It is imperative that Pryda Longreach and SpaceJoist™ floor trusses are located in the correct position, corresponding with the layout document and are oriented the right way up. The trusses may be marked with a "This Way Up" sticker or similar. If the truss is not marked in this way then ensure that the trusses match the following diagrams in figures 1.

LONGREACH TRUSS END ORIENTATION

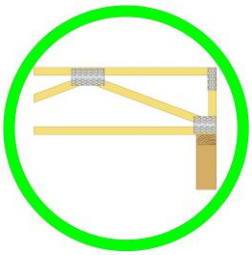

Right Way Up

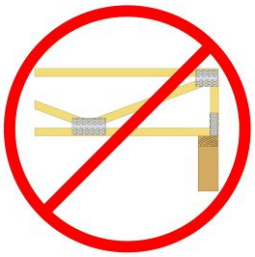

Wrong Way Up

SpaceJoist™

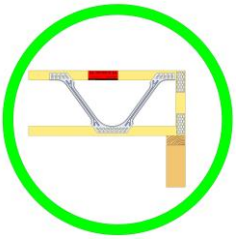

SPACEJOIST™ TRUSS END ORIENTATION

SpaceJoist™ are typically designed having the metal web start from top down for simple support via bottom chord (see image to left). The web orientation will be optimised depending on design criteria, loading conditions, and end type. Within a single project, web orientation may change depending on support condition such as top chord support. Check project layout installation details, truss design sheet to verify or contact truss fabricator if in doubt.
Refer to the 'This Edge Up" sticker or markings on the floor truss for correct orientation. A single project may have different web orientations, so it is crucial to verify the orientation for each truss or group of trusses during installation.

Figure 1: Pryda Floor Truss Orientation.

SUPPORTING STRUCTURE

The supporting structure for the floor trusses must be stable in its own right, and braced sufficiently, so that it is capable of withstanding all of the imposed loads on the floor trusses. It is critical that the support heights for the floor trusses are within acceptable limits and that the floor truss is bearing correctly on all design support locations. A minimum of 35mm bearing is required at all support points, but this may be subject to the design loads on the floor truss.

Refer to Section "Support Structure" on page 6 for more information.

CONSTRUCTION LOADS

During construction, overloading of floor trusses with building materials, or with other loads which they are not suitably designed for, must be avoided at all times. Overloading can damage the floor trusses and potentially cause a full or partial collapse of the floor system.

Refer to Section "Construction Loads" on page 10 for more information.

ON SITE VARIATIONS

Being fully engineered components, any modifications made on site to Pryda Longreach or SpaceJoist™ floor trusses are not permitted. Floor trusses must not be notched, drilled, cut or altered. If any alterations are required to be made on-site it is the contractor's responsibility to contact the Pryda fabricator who supplied the floor trusses and request a rectification design from Pryda.

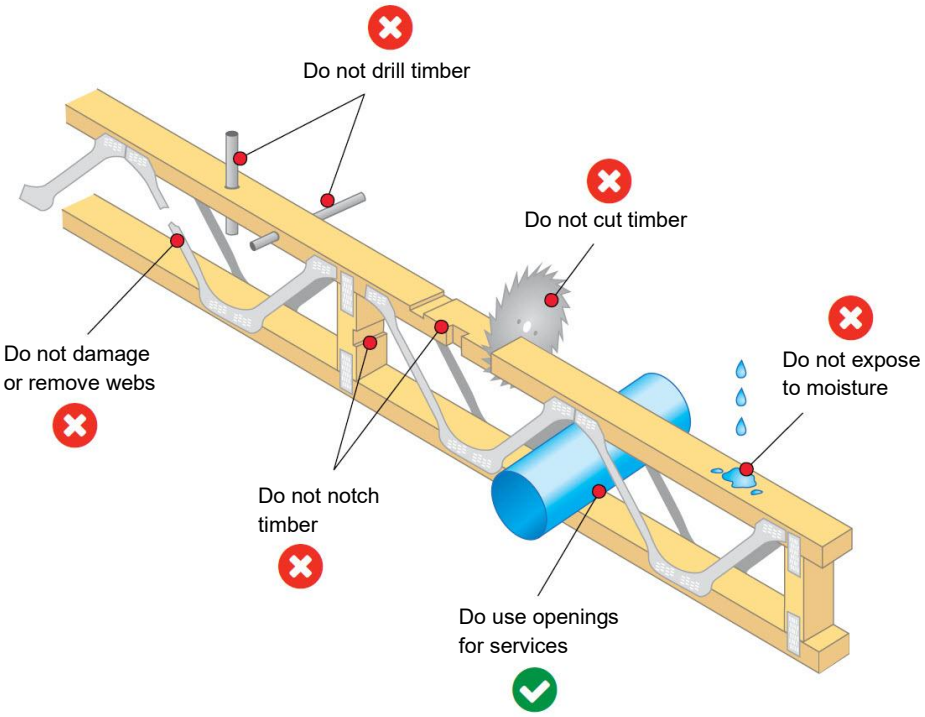

Figure 2: On site variations

SAFE HANDLING AND STORAGE

HANDLING

- When unloading with a crane, fabric slings should be attached to the timber chords or lifting points, not the metal webs. Metal chains/slings should not be used.
- Slings should be attached to the panel points closest to the quarter points.
- If unloading with a forklift, care should be taken to ensure that the forks do not damage them.
- Floor trusses may be lifted as either single units or packs, but care should be taken to avoid bending, twisting or dropping.
- Floor trusses should be lifted in a vertical position.

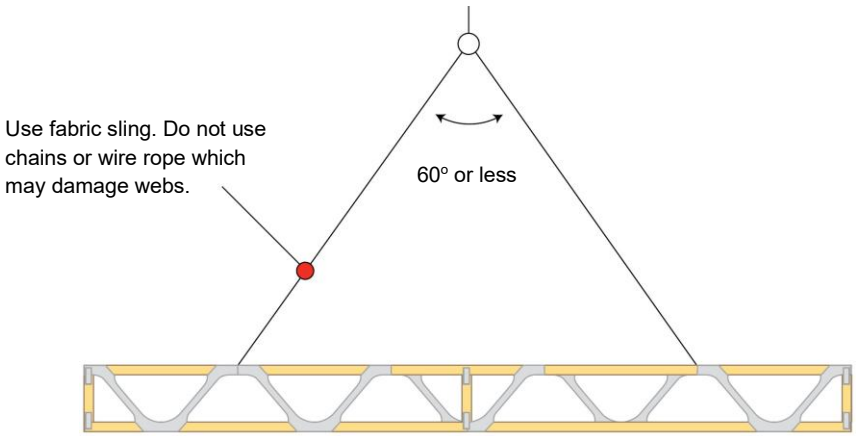

Figure 3: Handling

STORAGE

- Site storage is intended to be temporary immediately prior to erection so delivery should be arranged to minimise site storage time.
- Floor trusses should be stored on firm level ground well clear of any vegetation.
- They should be protected with plastic covering to protect them from short term exposure to inclement weather.
- Floor trusses can be stored either vertically or on the flat.
    - If stored vertically there should be adequate bearers under the panel points.
    - If stored horizontally they should be supported as to prevent distortion.

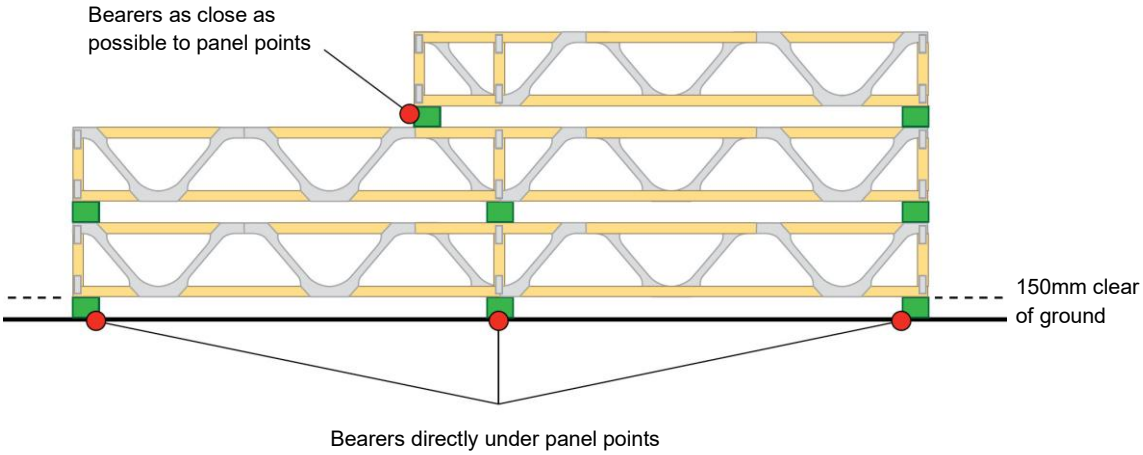

Figure 4: Storage - Floor trusses stacked vertically

SUPPORT STRUCTURE

It is imperative that the floor trusses be braced during construction so that they are stable and able to resist temporary construction loads. It is also critical that the sub structure supporting the joists (beams, walls, footings) be suitably braced and capable of withstanding the design loads (both permanent and temporary) applied to them from the floor system. The builder/installer is responsible for ensuring that the floor trusses are stable so that the health and safety of workers is maintained. Proper erection procedures are vital, and an onsite risk assessment plan should be implemented.

TEMPORARY FLOOR TRUSS BRACING SYSTEM

One key component is the **temporary bracing** of the floor system. This must be fixed PRIOR to any construction materials or workers being permitted on the flooring system.

Note: *Any floor truss support brackets and truss to truss connections required should also be FULLY installed and fixed prior to adding any load to the structure.*

As shown in figure 5 the floor system should be braced with diagonal bracing and binders at specified centres to provide lateral restraint for the floor system. This should be repeated at 12m sections along the length of the building if required.

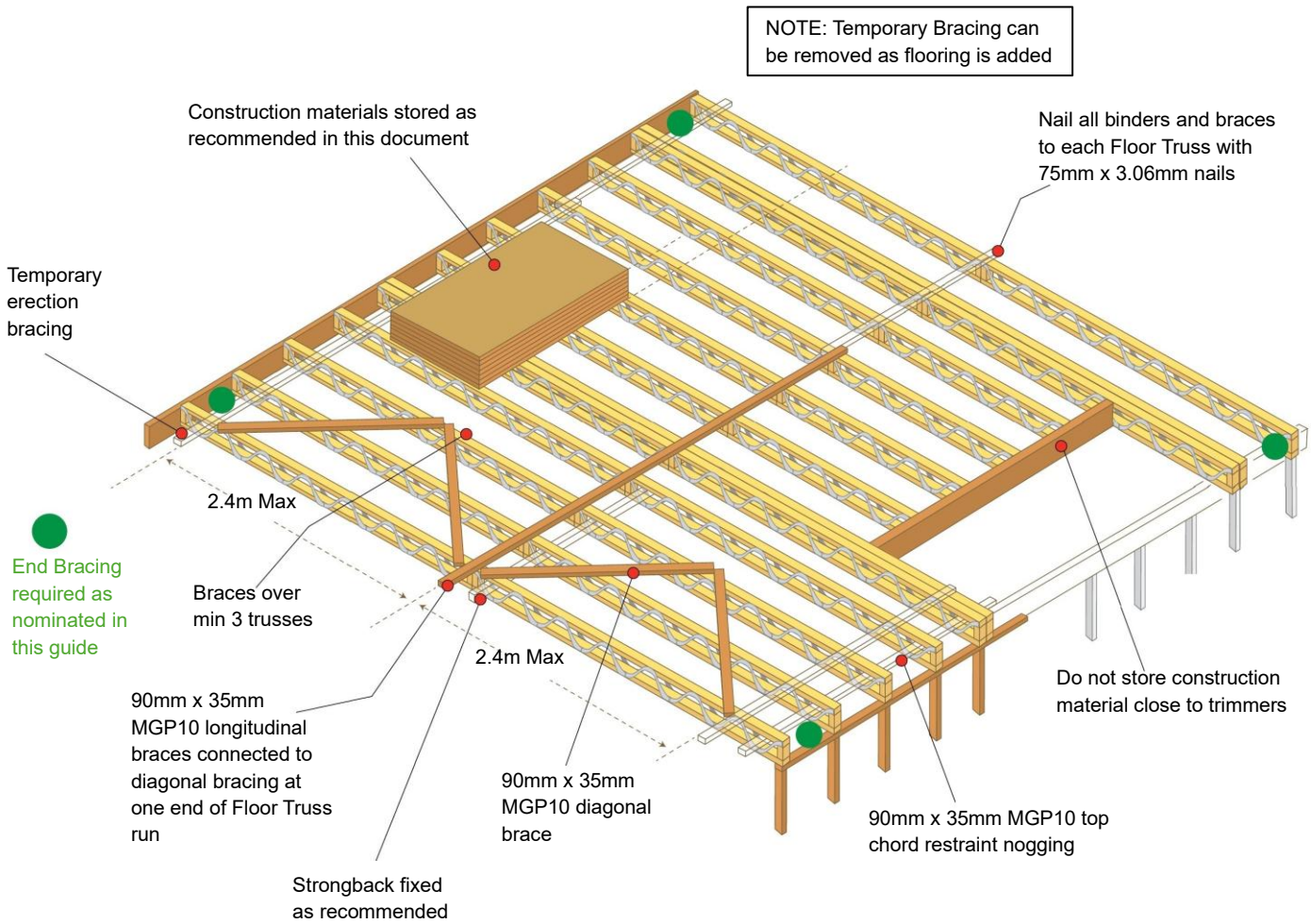

Figure 5: Bracing

STABILITY

The lateral loads from wind force on a building must be transmitted through the roof, walls and floors and ultimately to the foundation. Stability bracing provided at the ends of floor trusses is designed to transfer these forces from the wall above to the wall below. Use diagonally placed Pryda Strap Brace at 2700mm centres maximum at the ends of trusses and at any internal wall supports. The brace needs to be wrapped under the wall plate (see Fig 6a) to satisfy the nominal requirement. If brace is not wrapped under the wall plate (see Fig 6b), special engineering design is required to validate it's use. Alternatively, structural plywood sheets or a continuous rim board may be used as a substitute for diagonal steel bracing.

Consideration should be given to AS1684-2021 for more thorough analysis of the interaction between the roof, walls and floors in forming a complete and adequate bracing system. Also considered is the effect of voids on the performance of bracing diaphragms. If in doubt consult your local Pryda design office.

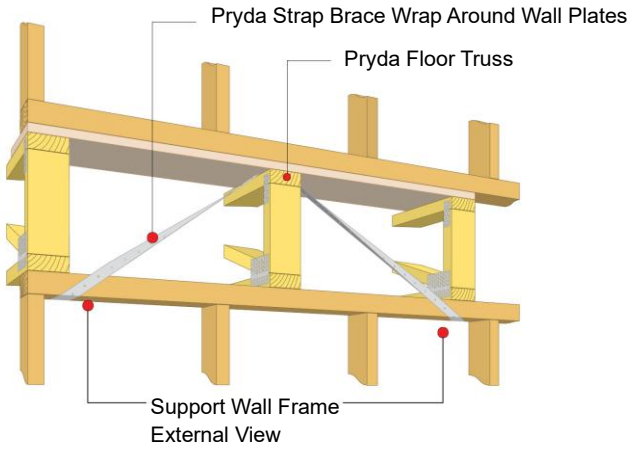

Figure 6a: Brace wrapped under wall plate is the preferred option.

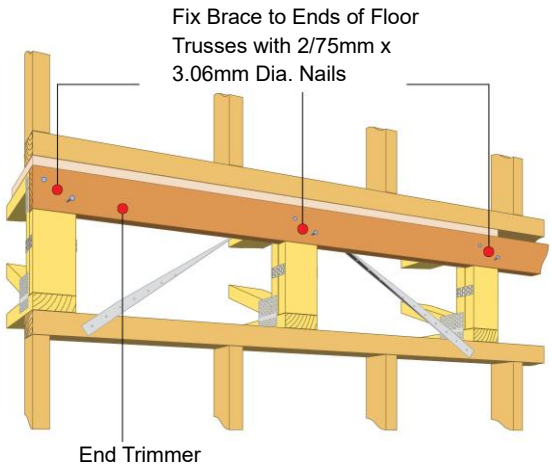

Figure 6b: Brace not wrapped under the wall plate is not recommended.

LATERAL BRACING OF FLOOR TRUSS CHORDS

Pryda Floor Trusses are braced laterally at the top chord level by the flooring material and at the bottom chord level by the ceiling lining. If there is no ceiling fixed directly (or by battens) then bottom chord restraints may be required similar to a roof truss and a separate diaphragm transfer mechanism required. Refer to floor truss design to verify requirements for individual projects.

BRACING WALLS SUPPORTED BY CANTILEVER

The ends of cantilevered trusses or beams supporting (over lying) bracing walls require bracing with diagonal metal bracing back to the (under lying) supporting wall frame refer to figure 9. Bracing to be fixed in accordance with recommendations of AS4440-2004.

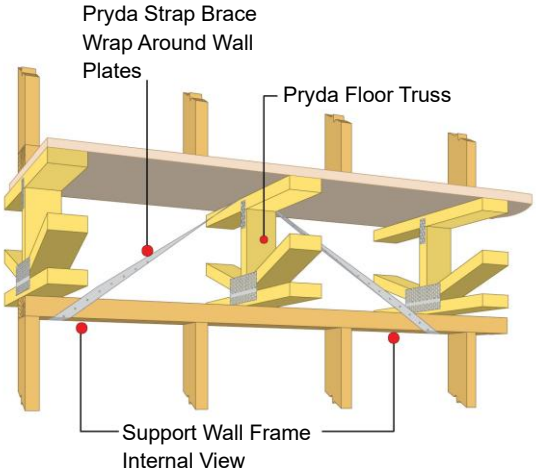

Figure 7: Internal bracing for stability and wind.

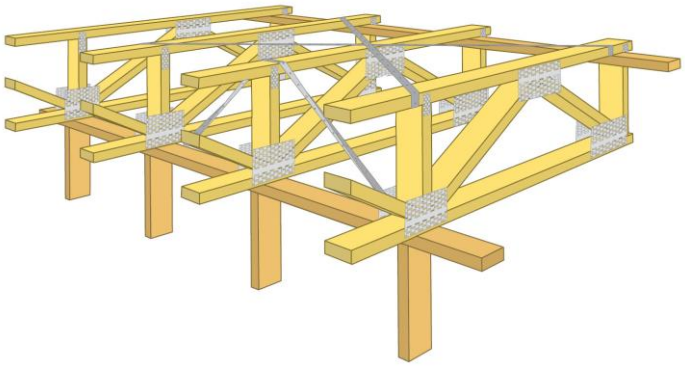

Figure 8: Bracing walls supported by cantilever.

FIXINGS AT SUPPORTS

All fixings at supports should be completed as per Pryda Producer Statement report and Floor Truss Layout as supplied by the Pryda fabricator – minimum fixings to walls would be as per figures 9–14. Note: a minimum 30mm bearing is required on all bottom chord and end block supports.

TOP CHORD SUPPORTED FLOOR TRUSSES

When supporting trusses on steel or timber beams via top chords it is preferable to restrain the bottom chord using skew nails while the top chord should be fixed to the supporting beam using screws or Pryda Multigrips or Triplegrips. This practice improves the stiffness of the floor by minimising movement and vibration at the supports.

When floor trusses are designed with a top chord support, unless noted otherwise, they require the support to be within 6mm of the vertical web at the end of the floor truss.

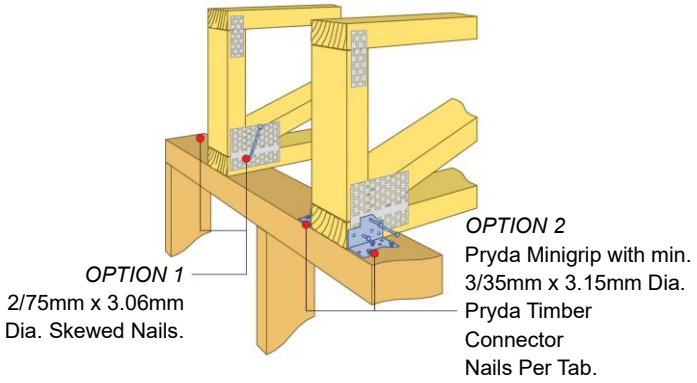

Figure 9: Typical plate support fixing.

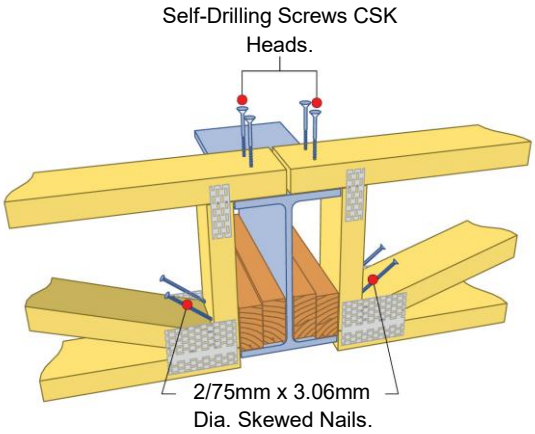

Figure 10: Typical fixing to steel beam.

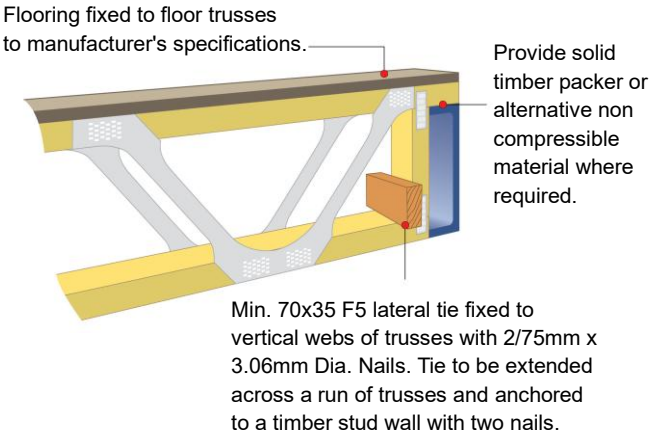

Figure 11: Alternative fixing to steel beam.

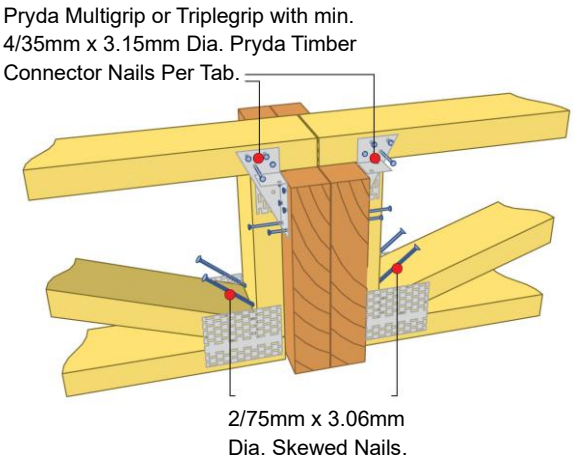

Figure 12: Typical fixing to timber beam.

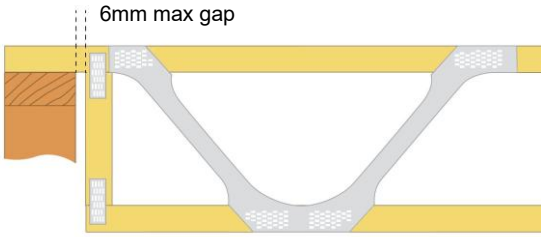

Figure 13: Typical top chord support fixing.

FACE FIXING OF FLOOR TRUSSES

Floor trusses can be supported on load bearing walls or from the face of beams or bearers using Pryda FBF94153 Framing Brackets (for 90mm trusses) or Pryda FBF74163 Framing Brackets (for 70mm trusses), fixed to the supporting member with 35mm x 3.15mm diameter Pryda Timber Connector Nails or No.12 x 35 Type 17 screws. Refer to Framing Bracket Data Sheet for Installation options and design capabilities.

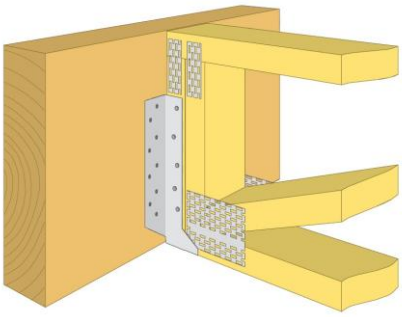

Figure 14: Typical face fixed connection using framing brackets.

BOTTOM CHORD OR END BLOCK SUPPORT BEARING

A minimum 30mm bearing is required at the bottom chord or end block supports.

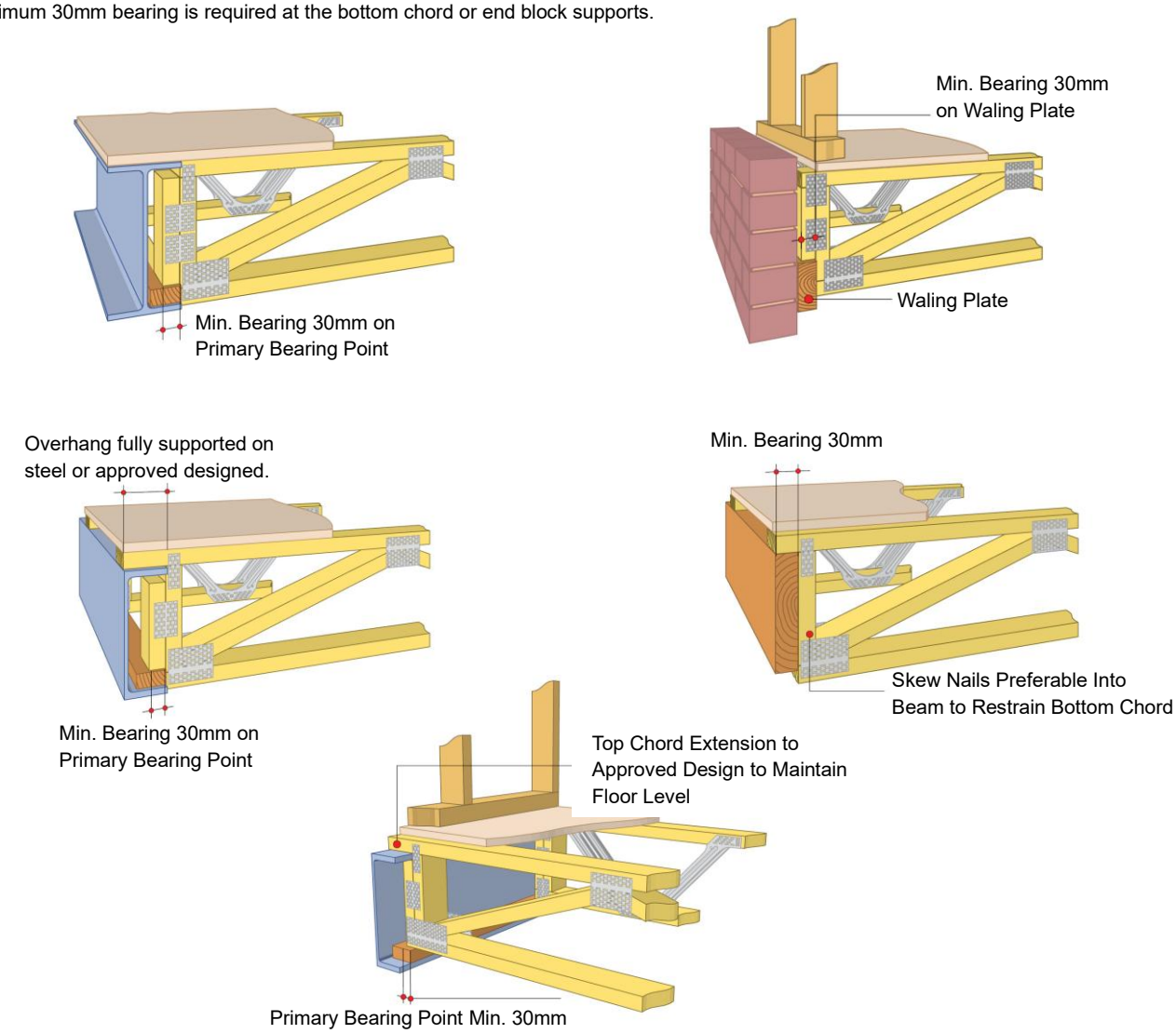

Figure 15: Bottom chord or end block supports bearing.

CONSTRUCTION LOADS

STACKING OF CONSTRUCTON MATERIALS TO AVOID

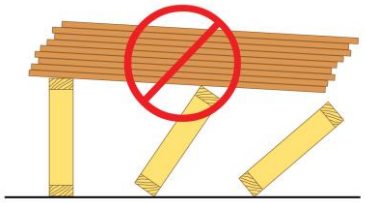

Figure 16: Don't stack materials on unbraced trusses.

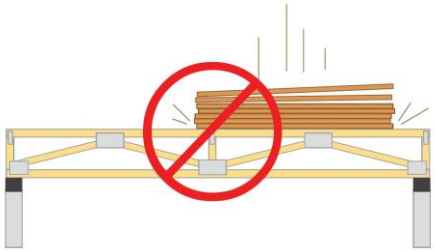

Figure 18: Don't drop on trusses. The impact can damage the trusses even if the load is small.

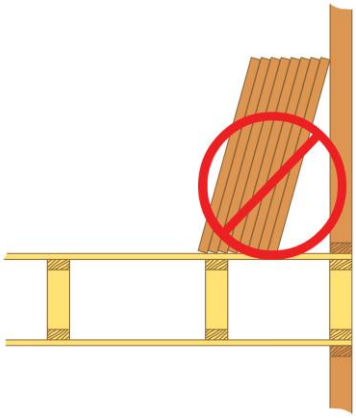

Figure 17: Don't allow the stack to lean against walls. Don't stack materials in concentrated areas so that they overload a single or small group of trusses.

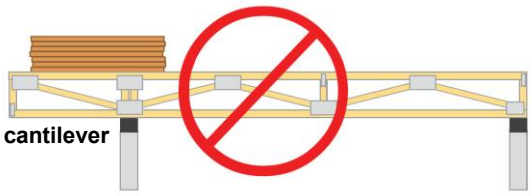

Figure 19: Never stack materials on the cantilever of a truss.

Figure 20: Don't walk on floor trusses until proper bracing is in place.

STACKING OF FLOORING SHEETS

It is critical to ensure that during the construction erection phase that floor trusses are stable and are not overloaded with materials that would exceed their design load limits - design loads are typically 1.5kPa (150kg/sqm) for residential floors. When stacking materials on floor trusses consideration should be given to the material weight and ensuring the stack height of materials does not exceed the design loads of the floor trusses.

For example:
Typically, material weights are approximately 13.2 kg/m2 for 19mm particle board flooring and 7.2 kg/m2 for 10mm plasterboard so the maximum number (height) of stacked sheets would be:

- 19mm particle board – max stack height 15 sheets
- 10mm plasterboard - max stack height 27 sheets

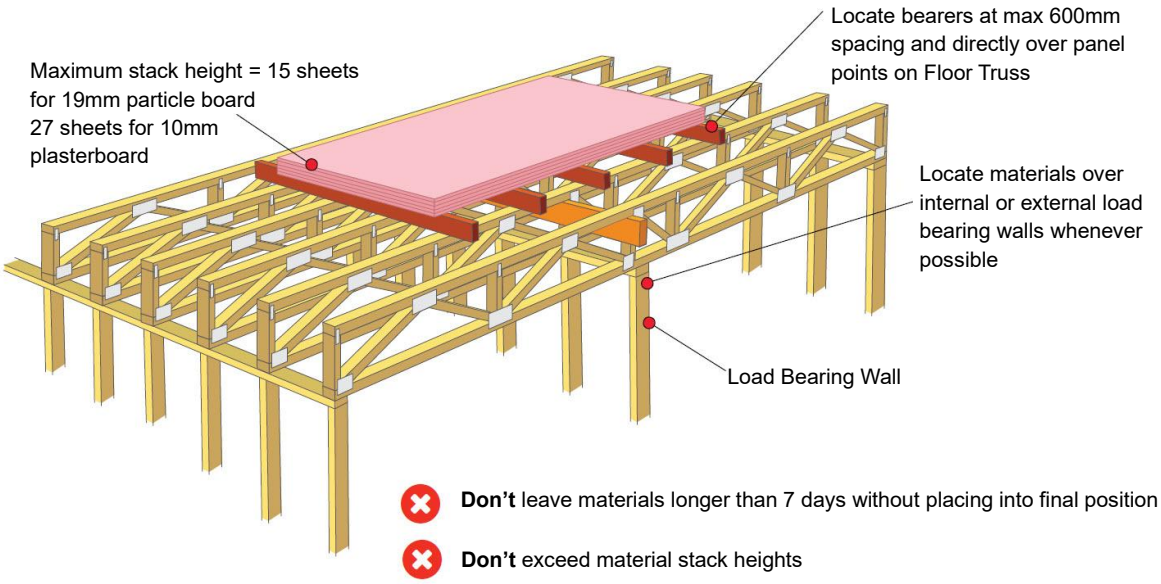

Figure 21: Stacking of material parallel to trusses.

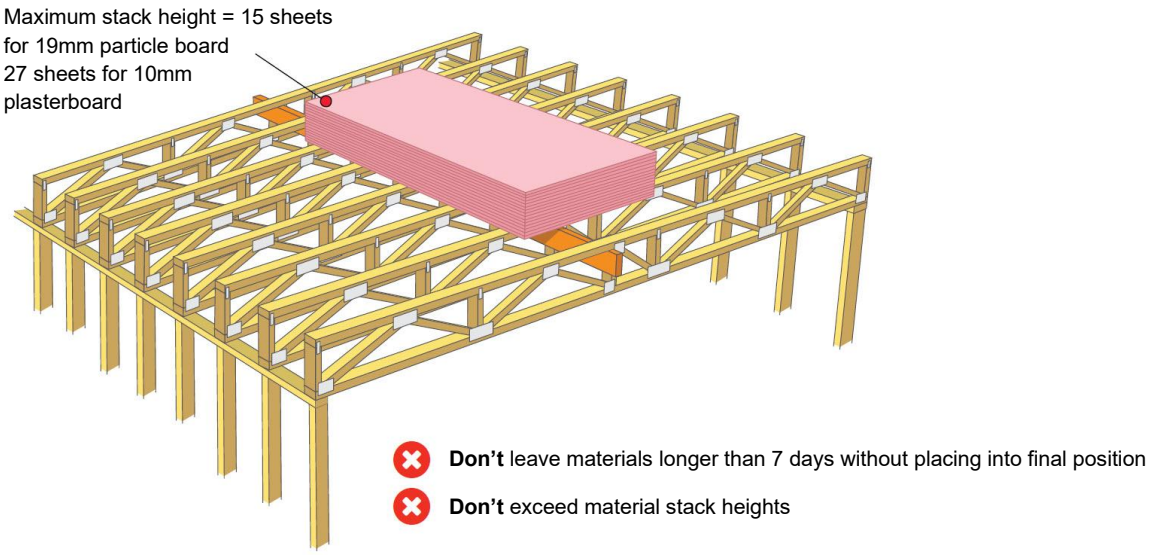

Figure 22: Stacking of materials perpendicular to trusses.

TRUSS ORIENTATION AND INTERNAL SUPPORT CONDITIONS

Floor trusses must be installed with the correct orientation. Careful consideration must be given to location of any internal load bearing supports and ensure that the floor truss is fully bearing on these supports PRIOR to the addition of any loads. Common installation issues that occur on site are that the floor trusses are orientated the wrong way around or upside down.

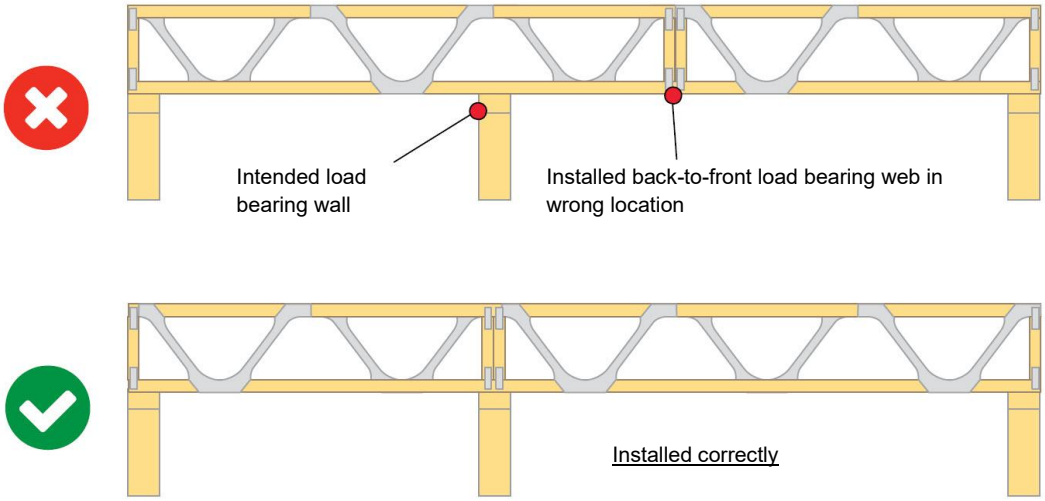

Figure 23: Common installation errors.

SUNKEN SECTIONS

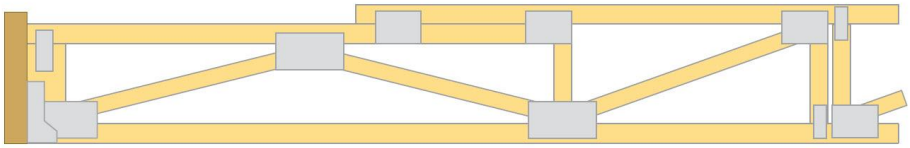

(a) Face fixed truss to cater for sunken sections at ends

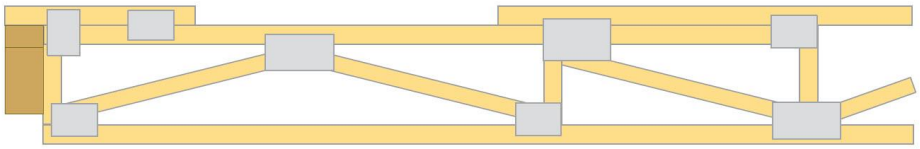

(b) Top chord supported truss with sunken section set back by a minimum 300mm from end web

Figure 24:Sunken Sections support types.

INTERNAL WALLS

NON-LOAD BEARING WALLS

Fixing of Floor Trusses to Bracing Walls

It is important that racking forces generated from stability and wind loads are transferred down through the structure to the foundations. The details in figures 25 and 26 show how these forces can be transferred from the upper floor system, through truss bottom chords to lower storey bracing walls. Pryda Shear Connectors (Product Code: PSC) can be used for this purpose. Alternatively, shear blocks fixed between the bottom chord of floor trusses and bracing walls as specified in AS1684.2 can be used.

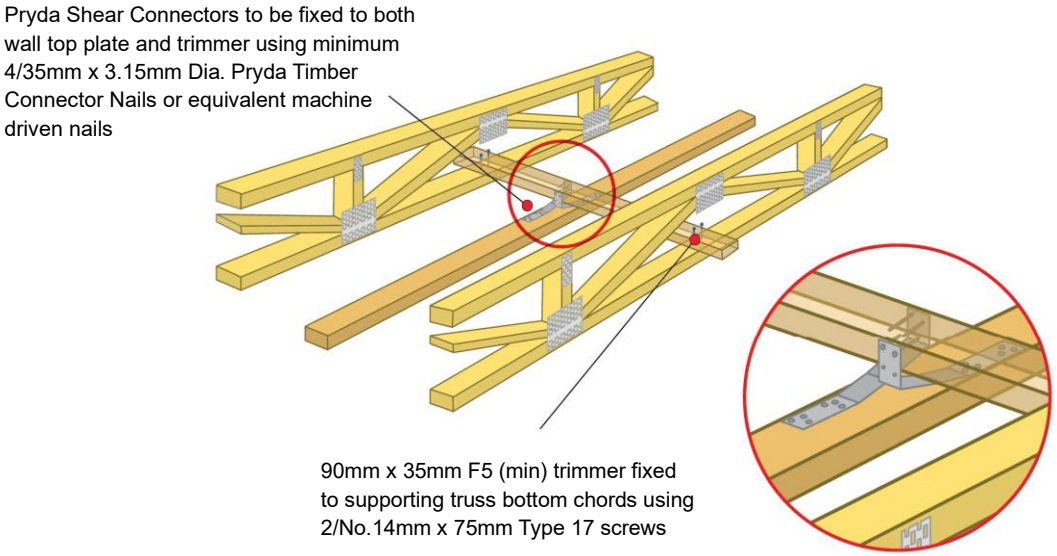

Figure 25: Walls parallel.

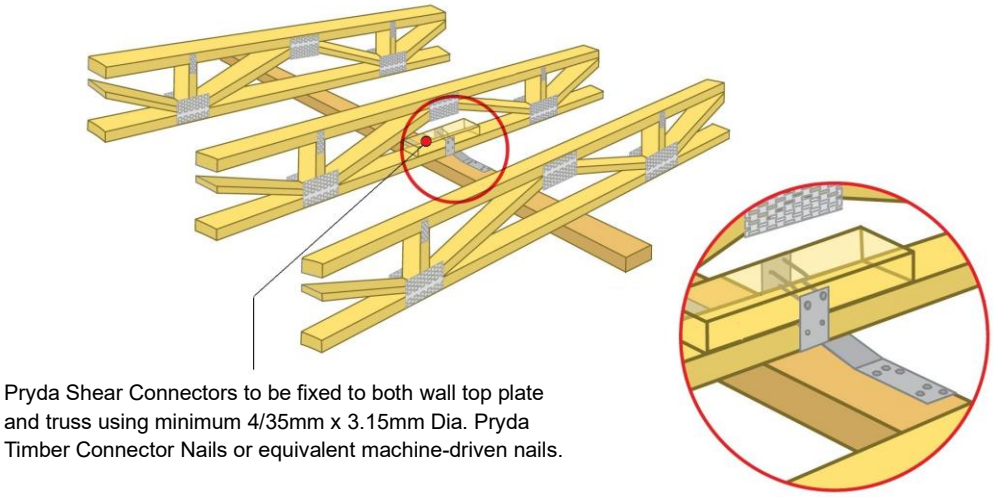

Figure 26: Walls perpendicular.

Fixing to Non-Bracing Walls

The top of internal walls should be fixed to the bottom chords of the floor trusses, so the walls are laterally stabilised. This is done with the connection of internal wall brackets, the Pryda Hitch (Product code: MPPHH). Refer to figures 27 and 28. Typically there should be 25mm - 35mm clearance over the internal non load bearing walls.

Alternatively, Pryda's FastFix™ Internal Wall Screw (IWS) meets the compliance requirements of AS1684 and AS1720, forming a deemed-to-comply solution under the NCC and delivering reliable performance with its fast, safe, consistent installation process. The IWS provides equivalent or better structural performance than a partition hitch while being less time consuming and easier to install correctly. For more information, refer to FastFix™ Internal Wall Screw Product Data Sheet for installation details.

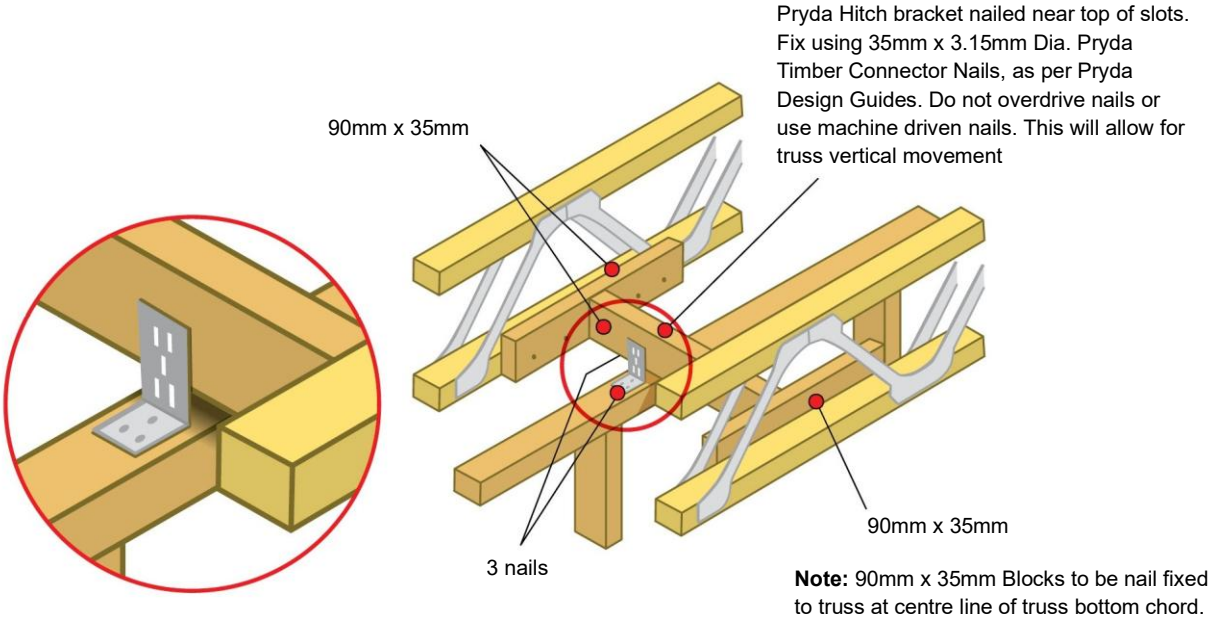

Figure 27: Truss parallel to non-bracing wall.

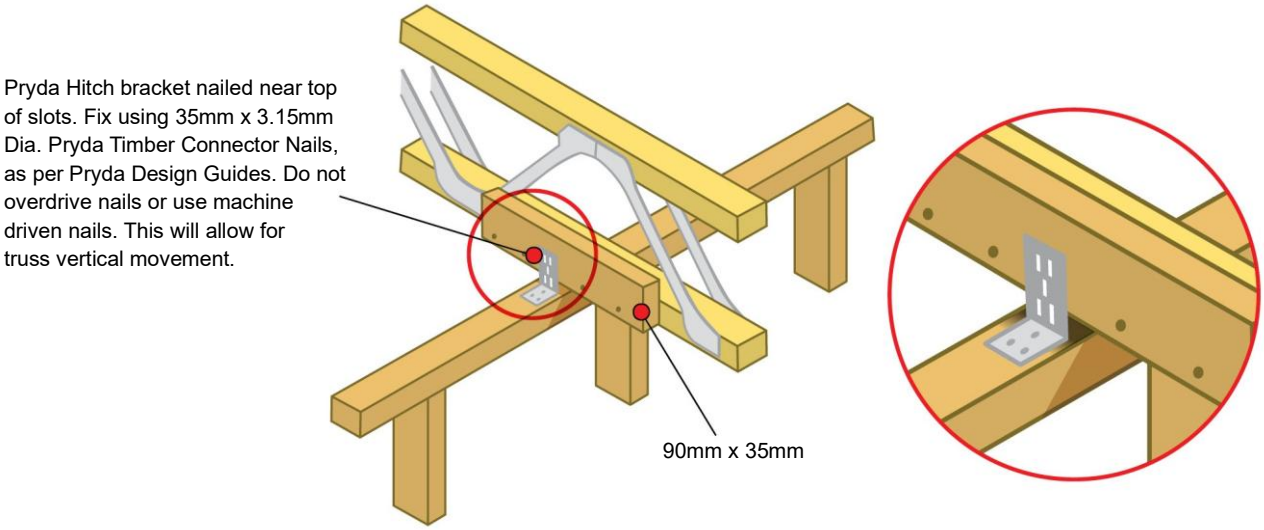

Figure 28: Truss perpendicular to non-bracing wall.

EXTERNAL WALLS

Where the end floor truss is supported along its full length by a lower storey wall or by continuous base brickwork or footing while carrying an upper storey wall above, a simplified floor truss, as shown, may be used.

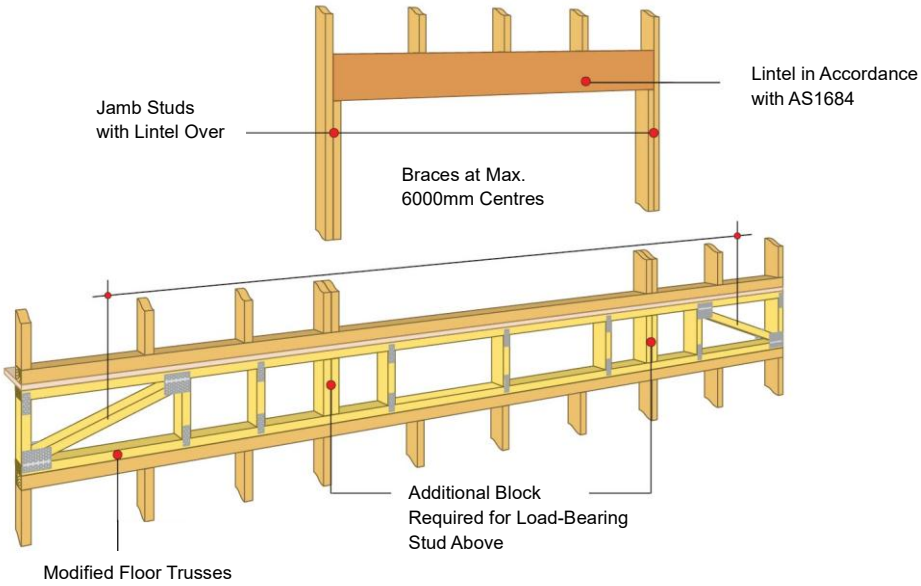

Figure 29: Fully supported end truss.

SUPPORT OF CONCENTRATED LOAD

Please refer to a Pryda licensed fabricator for design of a floor truss that is to carry a concentrated point load along its span length. To transfer concentrated point loads from upper level to lower-level frames refer to the details in figure 29, or where the load falls between two floor trusses use continuous solid blocking as shown in figure 30.

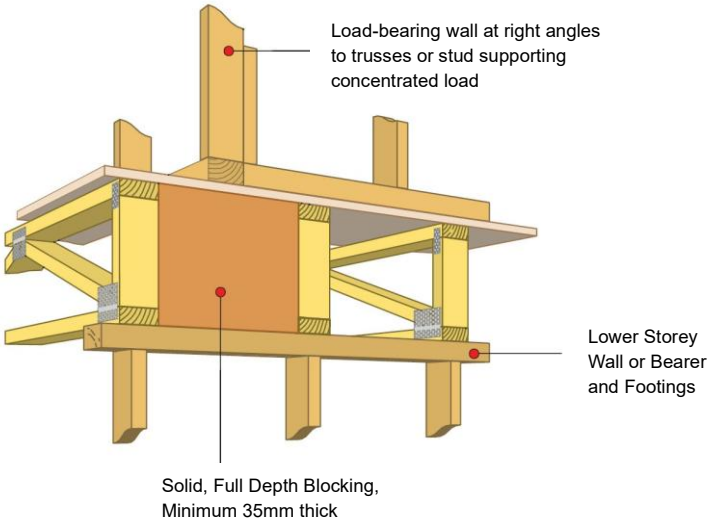

Figure 30: Blocking under wall or concentrated loads.

FLOOR OPENINGS

Pryda floor trusses can be detailed to suit an opening in a floor, e.g. as required to accommodate stairs.

BEAM POCKET SUPPORT – HEADER BEAMS

A header beam is normally required to support the incoming floor trusses. The header beam should be blocked hard up against the underside of the carrying floor trusses and nailed to each vertical web with 75mm x 3.06mm diameter nails. The beam should bear on both laminations of a double supporting truss if a double truss is specified.

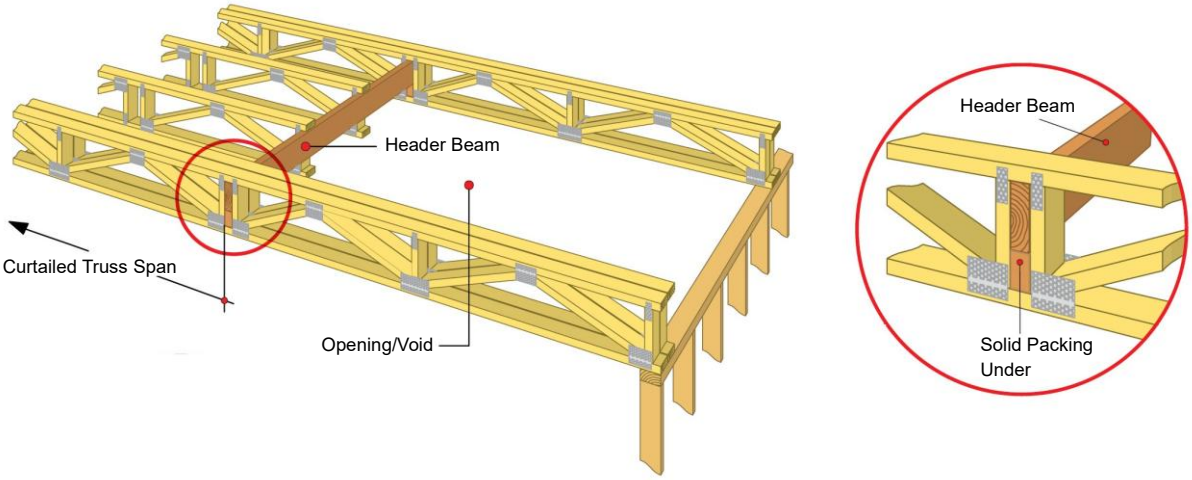

Figure 31: Floor openings.

DUCTS FOR MECHANICAL SERVICES

The open web configuration of Pryda floor trusses permits ductwork and mechanical services to pass through the depth of the truss.

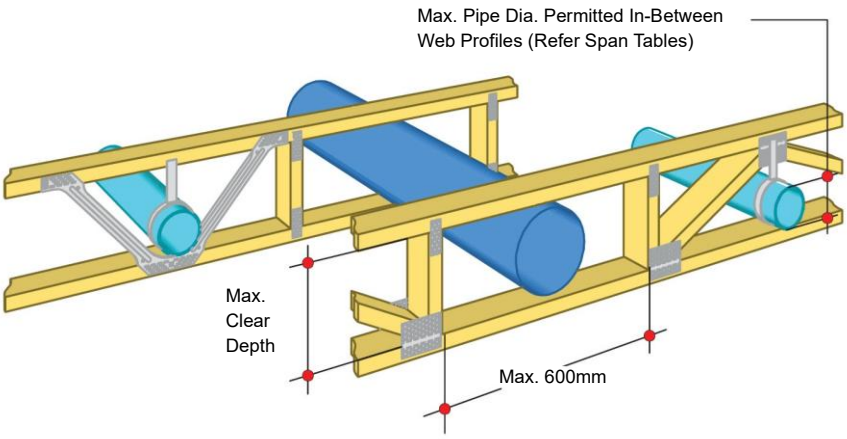

Figure 32: Centre gap for mechanical services

MULTIPLE TRUSS FIXING

Under concentrated loadings floor trusses may be required to be laminated together. In this case the web profiles of both laminations shall be identical, and connections should be introduced at 2400mm centres maximum via vertical webs. A 140mm x 35mm MGP10 or better block (minimum 300mm long for double truss lamination only) should make the connection between both vertical webs with 3/75mm x 3.06mm diameter nails into each vertical. Alternatively, long screws may be used in lieu of nails. The blocking should be located centrally to the double truss, firmly against the vertical webs and underside of top chords. There should be no gaps between blocking and webs, pack out gap with non-compressible material if required.

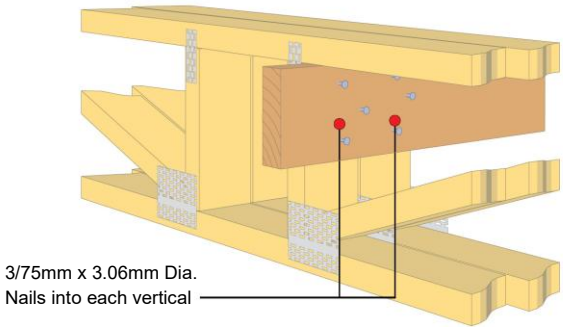

Figure 33: Multiple truss fixing.

CANTILEVERS

There are three common types of cantilevered balconies - internal, external, and those which support offset walls above.

Internal Cantilevers

Found in two-storey construction where the first-floor trusses are cantilevered only a small amount as an architectural feature. These cantilevers are built as a simple extension to the truss, with vertical webs introduced at the point of support.

External Cantilevers (Balconies)

Floor trusses can be designed and manufactured to include a cantilever for support of fully sealed balconies, generally outside of the building. If using Pryda Longreach or SpaceJoist™ then the balcony area must be fully watertight to prevent issues with the cyclical swelling and shrinking of timber on the Claw nailplates. Careful attention must be paid to balustrades and posts supporting handrails located over the floor trusses as typically the floor trusses are not designed for any lateral loads from these systems.

Engineering assistance should be sought to stabilise the posts and handrails independently of the floor truss system. Imposed Actions (live loads) on balconies are higher than those on the general area of the floor. For example, a load of 2.0 kPa is applied on balconies of houses, whereas the general floor load is 1.5 kPa. At the same time, a fully waterproofed tiled balcony floor could have Permanent Actions (dead loads) almost 3 times the standard flooring loads.

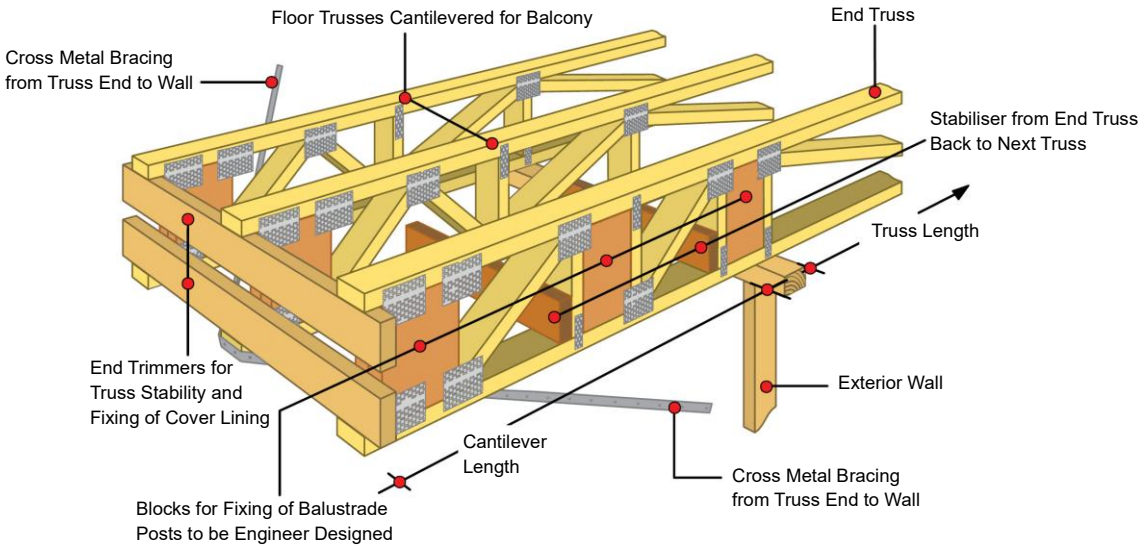

Figure 34: Cantilevered truss end detail.

Balcony Cantilevers – solid joists

Balcony cantilever areas can also be formed with solid timber extensions fixed to side of a floor truss spanning – refer to the detail following.

The cantilever balcony beam shall run a similar distance back into the floor truss and at least to the next vertical web past that distance. The cantilever joists are to be fixed to the truss bottom chord and vertical webs with minimum 3.06mm diameter nails (75mm long into 35mm joists and 90mm long into 45mm joists) at maximum 200mm centres.

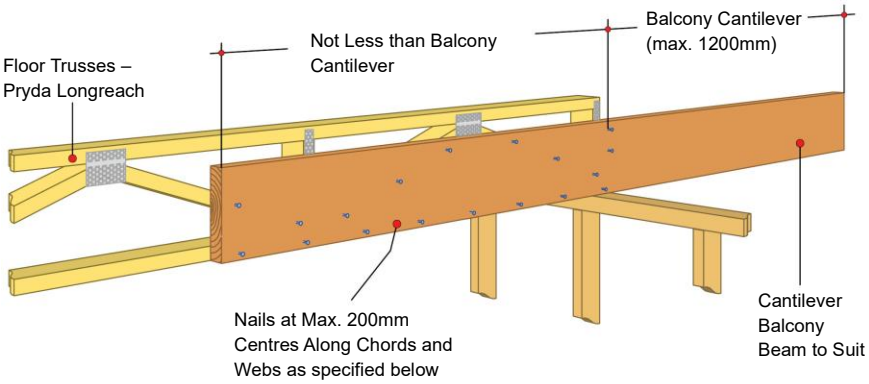

Figure 35: Cantilevered solid joist detail.

CANTILEVER SUPPORT OF OFFSET WALL

A common cantilever issue encountered is one in which the timber clad second storey frame is offset 150mm outside the lower storey frame. This permits the upper storey external wall cladding to finish flush with the lower storey brickwork. As a result, the floor trusses are cantilevered to support the upper storey roof loads and transfer these down to the foundations via the lower storey walls. Often this issue occurs parallel and perpendicular to the span of the floor trusses.

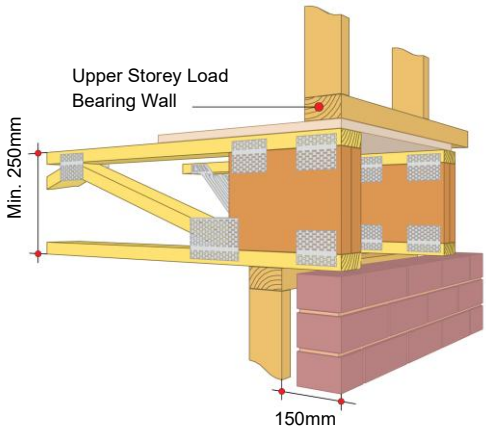

Figure 36: Cantilever - Perpendicular off-set upper load bearing wall.

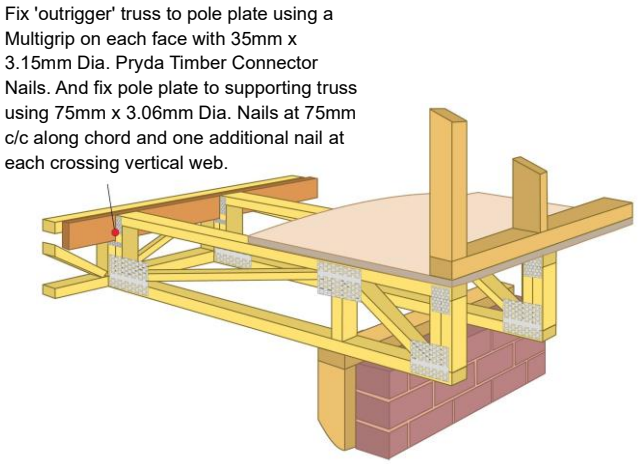

Figure 37: Large Cantilever - Parallel off-set upper load bearing wall.

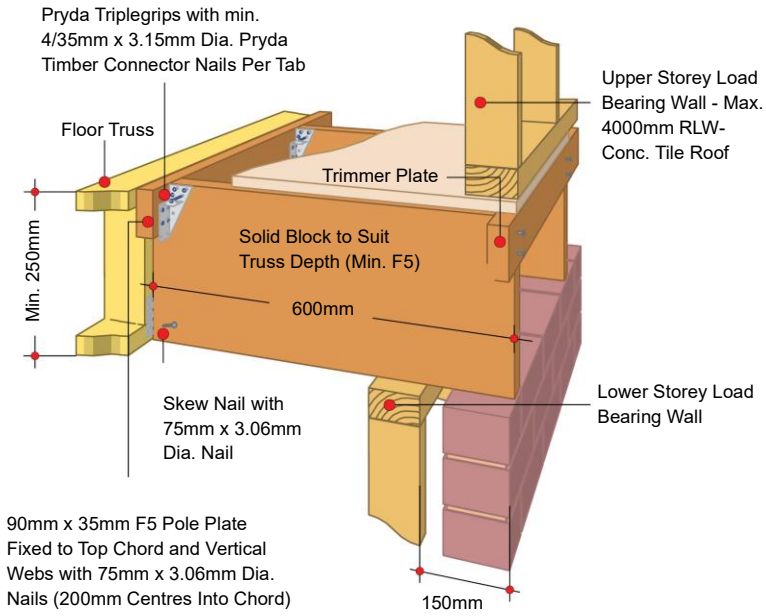

Figure 38: Cantilever - Parallel off-set upper load bearing wall.

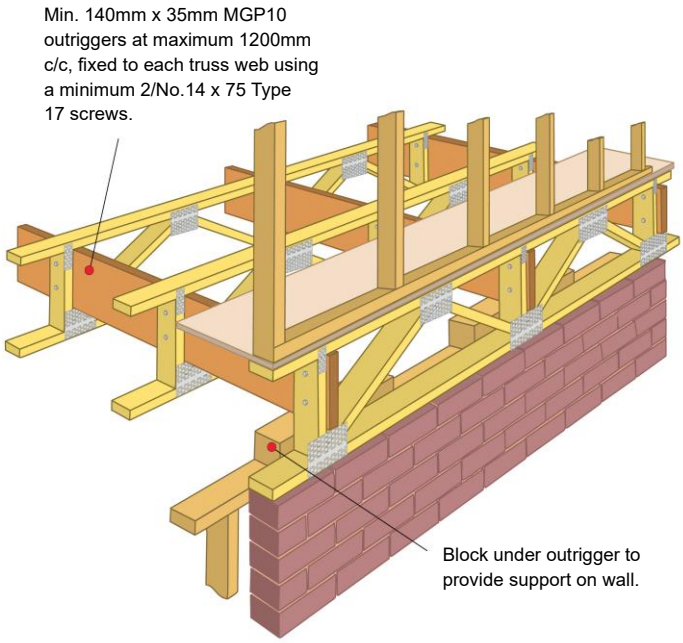

Figure 39: View from outside the building.

STRONGBACKS

Strongback beams run perpendicular to the trusses and are used to spread footfall impact loads to adjacent trusses when required. They are required for specific designs dependent on truss profile, span, depth, and truss timber grade make up. Refer to floor truss layout for Strongback required locations as this will be different for each job. Strongbacks are not required for trusses up to 3.5m in span. For trusses 3.6m to 6.5m span, use one row of Strongbacks located close to midspan. For trusses above 6.5m span use 3 rows of Strongbacks located one row at midspan, and two further rows located at each of the quarter points.

Strongback size and fixings

Nominal truss connection	Strongback depth and grade (all 35mm thick)	No. of fixings per connection
200	90 F5/P10 or 70 F17	2/nails or 1/screw
250	120 F5/P10 or 90 F17	3/nails or 2/screws
300	140 F5/P10 or 120 F17	3/nails or 2/screws
360	140 F5/P10 or 120 F17	3/nails or 2/screws
400	140 F5/P10 or 120 F17	3/nails or 2/screws

Strongbacks should be fixed hard up against the vertical web but may be fixed up against the top chord or the bottom chord to suit. Fixings may be hand hammered 75 x 3.75 nails, or power driven 75 x 2.9mm nails, or No.14 x 75mm Type 17 screws. Screws provide the best performance as they are more rigid, they clamp the timber components together, and they prevent squeaks due to various floor components loosening over time. Where SpaceJoist™ trusses have been used, and there is no vertical web close to the desired location of the Strongback, a supplementary vertical web may be nailed to the side of the truss instead with 2 nails to the top chord and to the bottom chord, to provide a fixing for the Strongback.

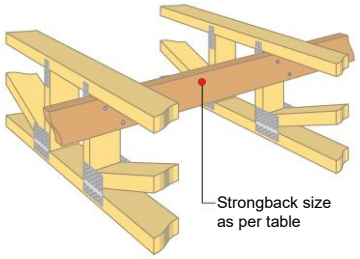

Figure 40: Longreach Strongback.

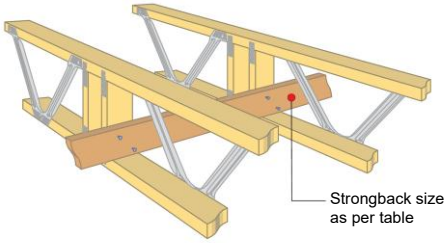

Figure 41: SpaceJoist™ Strongback.

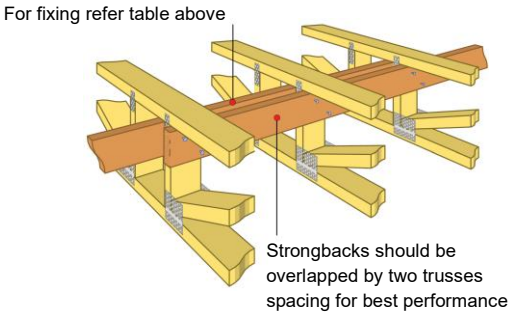

Figure 42: Strongback splice.

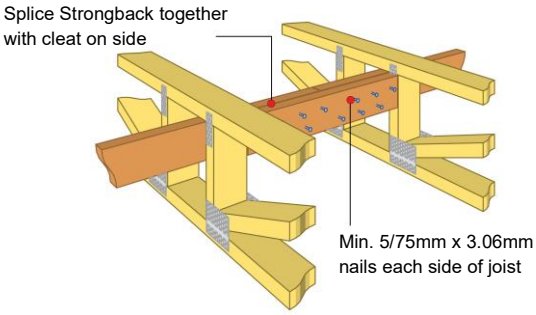

Figure 43: Alternative Strongback splice.

NON-ALIGNED STRONGBACKS

In cases where different adjacent spans cause the Strongbacks to be out of alignment, the following detail may be adopted. Vertical blocks of 90 x 35mm F5 minimum are fixed with 2/75mm x 3.06mm or equivalent nails to both top and bottom chords. Strongbacks are then fixed into the side of the block and the preceding vertical web with the number of nails specified in the table.

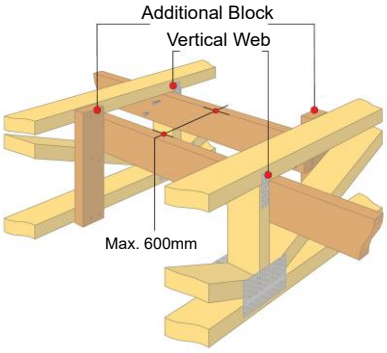

Fig 44 - Non-Aligned Strongbacks.

APPENDIX 1:
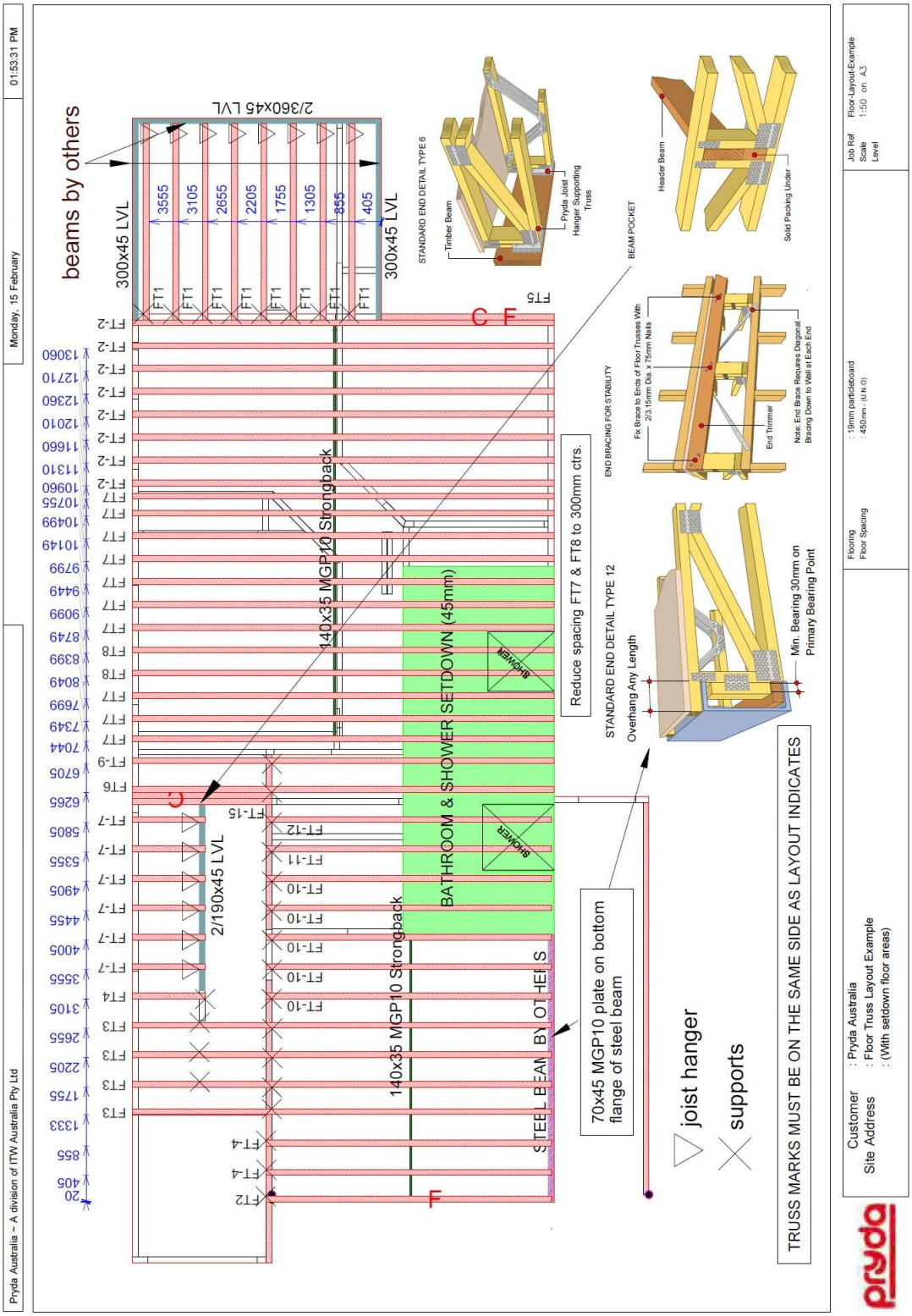
TYPICAL FLOOR TRUSS LAYOUT DOCUMENTATION